# MORE THAN AN ATTRACTIVE SURFACE.

**PREMIUM SURFACES**
FOR GREATER BRILLIANCE AND DEPTH EFFECT.

KraussMaffei
Pioneering Plastics

FACTS & FIGURES

# FACTS AND FIGURES IN **SURFACE TECHNOLOGY**

| Process | Label | Film | Fabric | Metal | TPE or TPU | Polyurethane system | Paint | Clear/colorless | Colored | 2 D | 2.5 D | 3 D | Different coating thicknesses | High component complexity | Openings | Soft touch | Surface aesthetics (shiny) | Depth effect | Light-fastness | Scratch resistance | Chemical resistance | Finished part (trim-free) |
|---|---|---|---|---|---|---|---|---|---|---|---|---|---|---|---|---|---|---|---|---|---|---|
| | Decoration | | | | | | | Color | | Geometry | | | | | | | Mechanics | | | | | |
| **CCM** Clear Coat Molding | ○ | ○ | ○ | ○ | ○ | ● | ● | ● | ● | ● | ● | ● | ● | ● | ● | ○ | ● | ● | ● | ● | ● | ○ |
| **ColorForm** | ○ | ○ | ○ | ○ | ○ | ● | ● | ● | ● | ● | ● | ● | ● | ● | ● | ○ | ● | ● | ● | ● | ● | ● |
| **DMH** Dynamic Mold Heating | ○ | ○ | ○ | ○ | ○ | ○ | ○ | ● | ● | ● | ● | ● | ○ | ○ | ● | ○ | ● | ○ | ● | ○ | ○ | ● |
| **Functional surface aesthetics** | ○ | ○ | ○ | ○ | ○ | ○ | ○ | ● | ○ | ● | ● | ○ | ● | ○ | ○ | ○ | ○ | ○ | ○ | ○ | ○ | ● |
| **DecoForm** | ○ | ● | ● | ○ | ○ | ○ | ○ | ○ | ○ | ● | ● | ● | ○ | ○ | ○ | ● | ○ | ○ | ● | ● | ● | ○ |
| **Multinject** | ○ | ○ | ○ | ○ | ● | ○ | ○ | ● | ● | ● | ● | ● | ● | ● | ● | ● | ● | ● | ● | ○ | ○ | ● |
| **IML & FIM** Inmold Labeling and Film Insert Molding | ● | ● | ○ | ● | ○ | ○ | ○ | ● | ● | ● | ● | ● | ○ | ● | ● | ○ | ● | ○ | ● | ● | ● | ● |
| **IMD** Inmold Decoration | ● | ● | ○ | ● | ○ | ○ | ○ | ● | ● | ● | ● | ● | ○ | ○ | ● | ○ | ● | ● | ● | ● | ● | ● |

# MORE THAN AN ATTRACTIVE SURFACE
# PREMIUM SURFACES FOR GREATER BRILLIANCE AND DEPTH EFFECT

Consumer articles, household goods, major appliances, automotive, electrical and electronic applications – application areas for technical parts are nearly endless. Surface technology perfects surface aesthetics, haptics (feel), decoration and functional integration – plastics fully reveal their special properties and benefits compared to other materials in these applications.

KraussMaffei gives you access to the right machine technology and the appropriate manufacturing process for your surface application based on our many years of experience and a large portfolio of plastics technology.

**Your advantages at a glance:**

- Uncompromising, high-quality production up to cleanroom standards
- Selection from comprehensive machine and intelligent process technology
- Improvement of product quality
- Increasing the efficiency of your manufacturing

# FUNCTION, DESIGN, LOOK AND FEEL
# WE SURROUND YOU WITH PREMIUM SURFACES

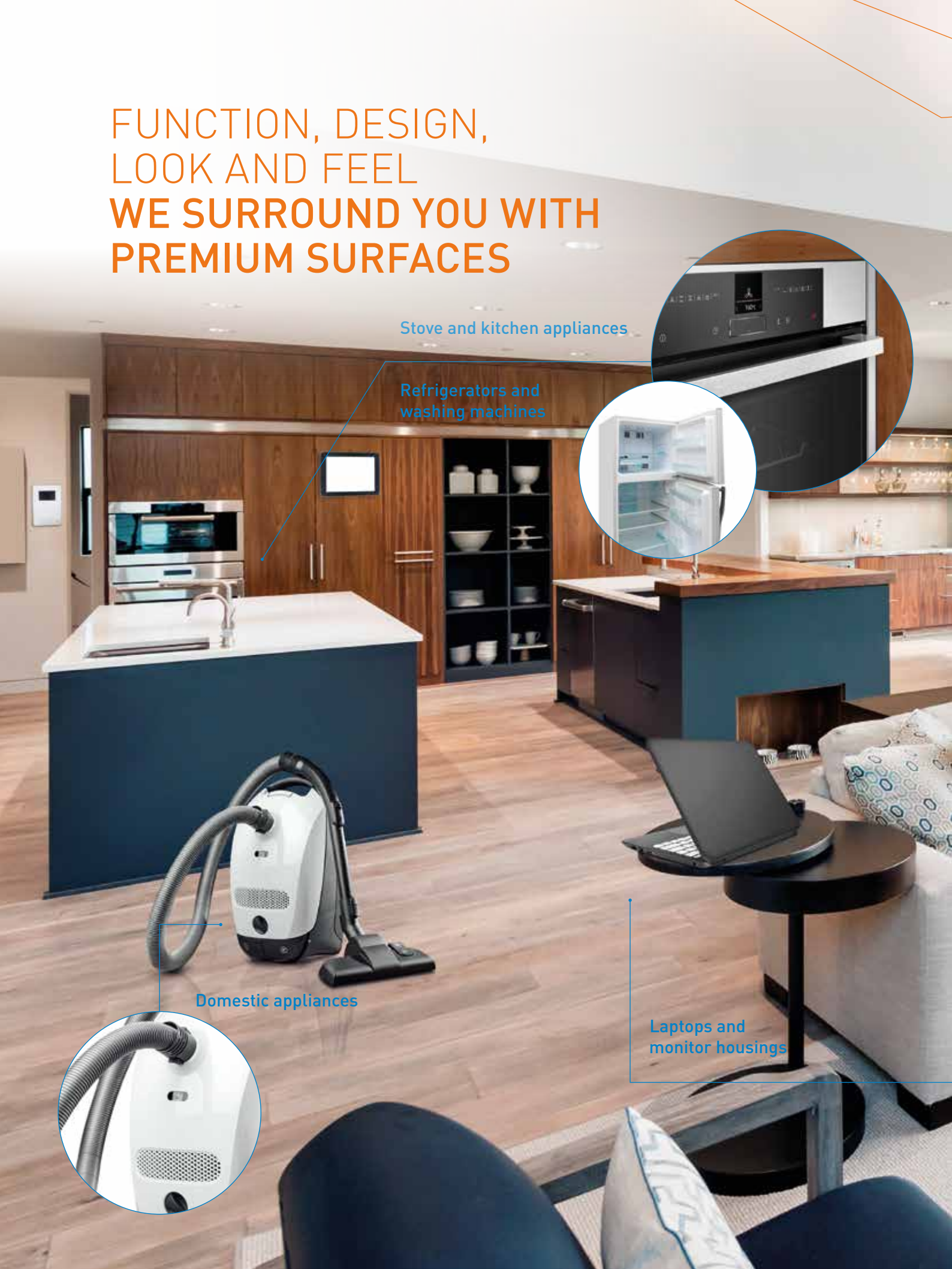


Smartphones
and tablets

# For the finest look and feel
# Fine wood coating with Clear Coat Molding (CCM)

Fine wood trim is an important element for underscoring the premium-quality look of a vehicle's interior. Using the CCM (Clear Cold Molding) process developed by KraussMaffei, you can enhance such components with a scratch-resistant coating in a single work step.

The automated process coats the wood very thinly with a clear two-component PUR system. KraussMaffei's patented cavity pressure regulation compensates for the volume fluctuations caused by the natural structure of the material. As a result, the cavity is always optimally charged.

### CCM for high quality

CCM machines guarantee optimal temperature control for extremely sensitive raw materials in the process. Even very small output rates are mixed perfectly and poured without bubbles into the mold cavity. As this happens, the filling process is regulated by the cavity pressure. This enables minimal changes in volume caused by natural expansion or shrinkage of the wood to be regulated. The cavity is thus charged optimally and consistently high quality is ensured.

To date, applications such as these had to be manually painted in a time-consuming process. Now with this innovation from KraussMaffei, production is automated. This means that fewer process steps are required for manufacturing components and personnel costs are reduced. In addition, the CCM process increases the quality of the components. KraussMaffei's longtime experience with moldmaking and mold carrier technology also ensures that you get high component quality, not only visually but in all other respects.

### YOUR ADVANTAGES:

- Premium-quality coatings in a short amount of time
- Meets high requirements for the optical quality of components
- Optimal temperature control for very sensitive raw materials

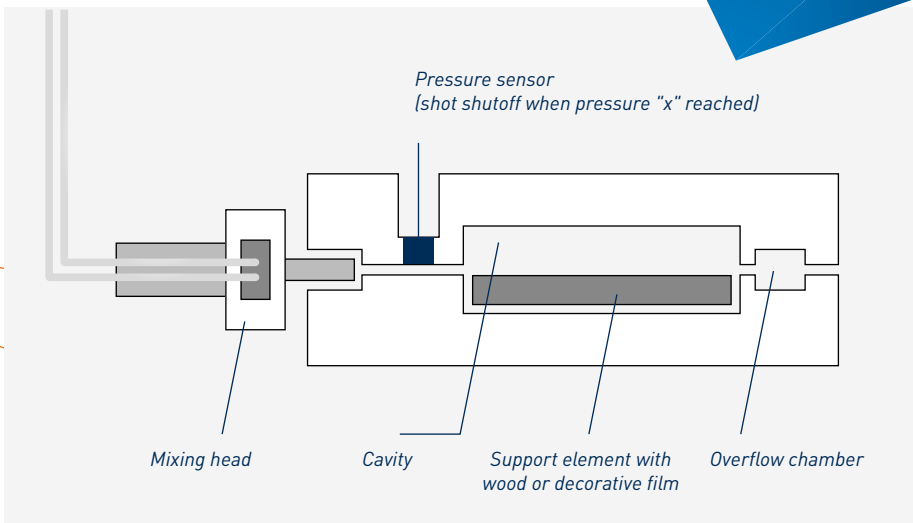

| | |
|---|---|
| ***Component*** | Mercedes S-Class dashboard decor panel |
| ***Material*** | Real root wood veneer on injection molding carriers, with flow-coated polyurethane transparent material |
| ***Technology*** | CCM Clear Coat Molding |
| ***Advantages*** | – Automated manufacturing, even of complex components<br>– Solvent-free and lower VOC values than you are used to from conventional painting processes<br>– Scratch-resistant transparent layer over the wood<br>– No yellowing, stays clear |

| | |
|---|---|
| **Process** | **CCM – Clear Coat Molding** |
| **Description** | **Part insertion – Mold closing – Pouring process**<br>The parts to be coated are inserted into the mold. A gap with the thickness of the paint layer remains free in the cavity. This is filled with polyurethane in the high-pressure process. This way you can produce high-quality coatings in a short time. |
| **Features** | 1. Eliminates labor-intensive varnishing process<br>2. Uniform coating layer thickness<br>3. Reduction of emissions |
| **Typical applications** | Trim parts on the vehicle, consumer durables, medical technology |

# Innovative production concept for multi-component parts
# ColorForm: Intelligent combination of injection molding and PUR/PUA processing

ColorForm is based on the principle of multi-component injection molding, which has been proven for many years. The notable aspect of this is that the basic carrier is flow-coated with polyurethane (PUR) or polyurea (PUA) as a surface material in the second cycle after injection molding of the thermoplastic base body. This provides an exceptionally high-quality, scratch-resistant surface.

The automotive industry is always striving for the best quality. ColorForm fully satisfies this demand, since it is an innovative technology that makes it possible to create colored or transparent high-gloss surfaces just a few tenths of a millimeter in thickness.

### Save space with RIMStar Flex

The surface material (PUR/PUA) is injected directly into the cavity using the RimStar Flex ColorForm reaction process machine - which has been specially developed for this technology - and using the mixing head. RimStar Flex systems are specifically designed for metering small quantities and can be positioned around the injection molding machine in an extremely compact way. It now saves even more space thanks to the fully integrated RimStar X.

### New effects with ColorForm

Individuality is becoming increasingly important for consumers. They want less mass production and more exclusivity. Designers need to create an increasing number of new effects to meet this demand. ColorForm gives you completely new options. For example, elements such as design lines, lettering, symbols, high gloss, directly alongside matte effects, depth effects and different structures on the surface.

With ColorForm, rejects can be reduced in several process steps. Firstly by eliminating conventional painting processes, secondly due to the single-stage process and thirdly due to the extremely robust surface finish. High scrap rates in the painting process are now a thing of the past. The process-reliable one-step process and its high degree of automation provide you with more good parts that also no longer need to be cleaned separately.

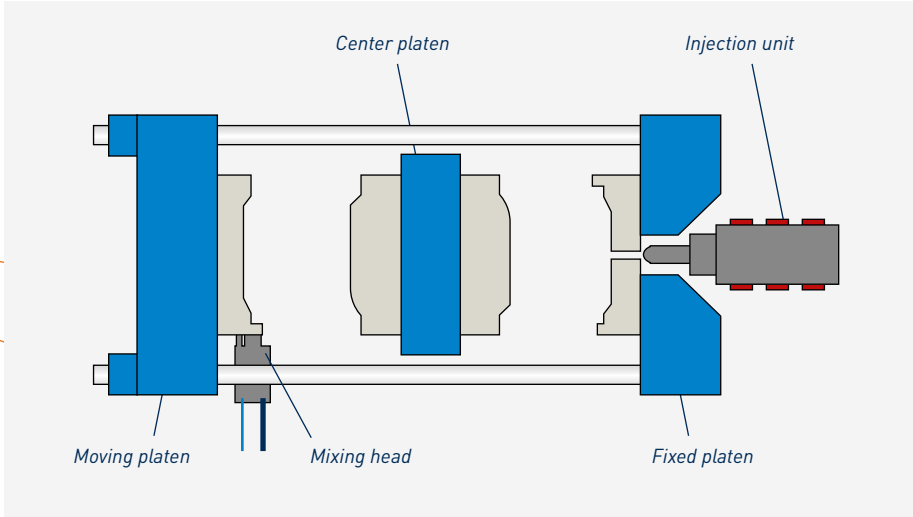


### YOUR ADVANTAGES

- Surface material introduced directly into the cavity
- Space-saving concept
- Fully integrated and fully automated process
- Minimized logistic costs when manufacturing haptic components
- Reduced reject rate

| | |
|---|---|
| ***Component*** | Light sculpture – Automotive 9 Demonstrator |
| ***Material*** | ABS / PC with two-color polyurethane coat |
| ***Technology*** | ColorForm |
| ***Advantages*** | – Completely painted component directly from the injection molding machine<br>– Solvent-free and lower VOC values than you are used to from conventional painting processes<br>– Significant freedom in designing surface effects |


| Process | ColorForm |
|---|---|
| Description | **Injection – Painting – Curing**<br>These can all be performed in a single production step with ColorForm. This can serve as a substitute for all of the usual painting steps. You get ready-refined parts with finest high-gloss surface finish straight from your production system. |
| Features | 1. High-gloss directly from the mold without any follow-up polishing<br>2. Cost-effective creation of premium surfaces with new effects<br>3. Ability to create structured surfaces and logo depictions with high detail in the surface |
| Typical applications | Trim parts on the vehicle, consumer durables, medical technology |

# Dynamically inductive mold heat-balancing
# Advanced surfaces with Dynamic Mold Heating (DMH)

DMH stands for dynamic mold heating and entails a special mold heat-balancing process where the mold wall temperature is drastically increased before injection and lowered back to the normal wall temperature after injection.

In addition to the method of using water for heating up, there are inductive and electric (ceramic) heating systems as well as steam. Heating up from the outside via IR radiation or lasers is also possible. In most cases, water is used for cooling. Another alternative is $CO_2$. Accordingly, these are often referred to as water/water, steam/water, electric or inductive systems. It is possible for both mold-halves to be equipped with DMH or just one of the two.

If water or steam is used for heating up, the heat-balancing channels must be contoured, i.e. just below the cavity because the heat transfer is relatively slow. Otherwise, too much cycle time would be lost because heating and cooling take place in the same channel.

### Electric and inductive systems

In electric or inductive systems, only cooling takes place via the heat-balancing channels and it is usually switched on permanently. The heating element is activated during the heating phase. The transfer to the cavity is significantly faster. In electric heating systems, it must be noted that the dimension and geometrical freedom are limited. The inductive system is much more flexible, however, it requires special adaptation to the mold.

### YOUR ADVANTAGES:

- Laser and hologram appearance
- High levels of production efficiency without additional film technology
- One-shot process
- High-precision reproduction of the microstructures which are applied to the component in the mold using laser technology

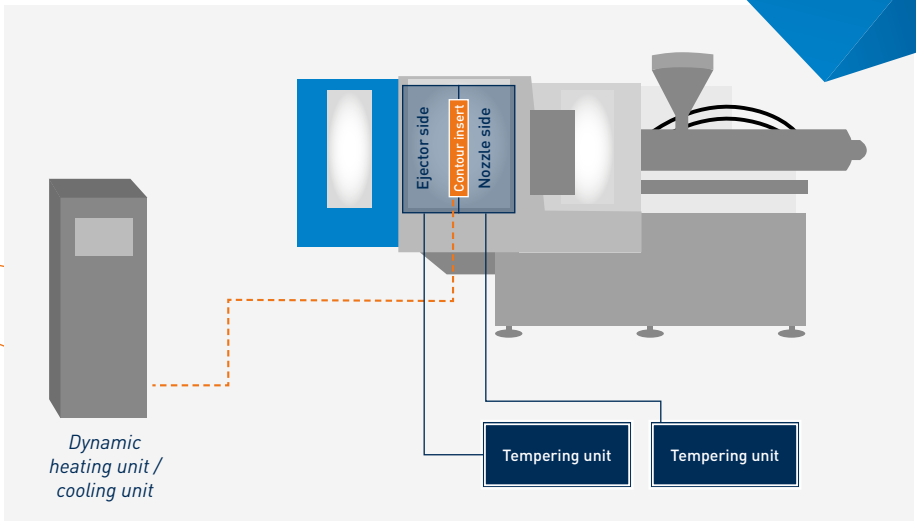

| | |
|---|---|
| ***Component*** | Finisher |
| ***Material*** | PC |
| ***Technology*** | DMH Dynamic Mold Heating |
| ***Advantages*** | The hologram is made visible as a result of the high dimensional accuracy |

| Process | DMH – Dynamic Mold Heating |
|---|---|
| Description | **DMH in a one-shot process**<br>Components with premium-quality surfaces are developed in the one-shot process. As a result, additional in-mold decoration steps such as preforming, punching and feeding have been omitted. |
| Features | 1. Excellent surface quality<br>2. Nanostructures (for example, hologram appearance, anti-reflection coating)<br>3. Reduction of wall thicknesses<br>4. Prevention of joint lines |
| Typical applications | Decorative panels (radio bezel, center console, trim strip), finishers and housing of premium-quality household appliances, displays with nanostructures for anti-reflection, lenses with stringent requirements on the external geometry |

# High-quality micro and nanostructures
# Our answer: functional surface aesthetics

Optical articles are of immense economical importance for plastics processing. With specifically developed compression molding processes and dynamic mold heat-balancing, the particular quality requirements on optical articles can be fulfilled.

Compared to glass, plastics provide significant advantages: in addition to low weight and low material costs, they have an increased impact strength. There is another significant advantage that comes from the injection molding process. This process offers greater levels of design freedom and is unbeatably cost-effective in large quantities.

Furthermore, premium-quality optical surfaces such as anti-reflection coating can be completed in the injection molding and compression molding of micro and nanostructures. This is possible in both single-component as well as in multilayer processes.

### Dynamic mold heat-balancing

The demolding and injection compression molding of structures are improved through the use of a hotter mold wall. This means that users are working with dynamic mold heat-balancing while simultaneously preventing excessive cycle time extension, and have the option of cooling back down to the demolding temperature. In doing so, the cavity is heated before or in parallel to the melt injection and subsequently cooled. This must occur as close to the contour as possible. This also minimizes the internal stress caused both by the injection compression molding and by the dynamic heat-balancing.

**YOUR ADVANTAGES:**

- Surface structuring provides functionality
- Reduced internal component stress
- Sculptured surfaces are possible
- Maximum precision with multilayer

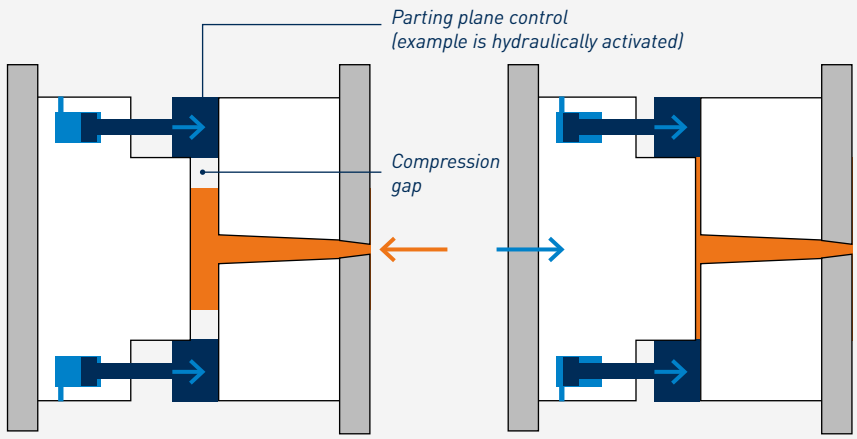


- *Mold closing to compression gap*
- *Moving the parting plane control out*
- *Injection for compression gap*

- *Compression molding by closing the mold with active parting plane control*

| | |
|---|---|
| ***Component*** | Lens |
| ***Material*** | PMMA |
| ***Technology*** | Functional surface aesthetics, multilayer |
| ***Advantages*** | – Improvement of optical performance (illumination and efficiency) provided by LED optics based on sculptured surfaces<br>– Great design freedom and functional integration<br>– Reduction of cycle time with dynamic heat-balancing concept |

| Process | Functional surface aesthetics and optical applications |
|---|---|
| Description | **Molding process on the highest level**<br>Unlike glass, when injection-molding optical articles from plastic (e.g. lenses, eyeglass optics, prisms, washers), it is not only the geometry that is influenced by the molding process, but also the inner properties. This results in exceptionally strict requirements such as maximum shape and dimensional accuracy, low tensions and orientation and maximum transparency and purity. |
| Features | 1. Transparency<br>2. Freedom from stress<br>3. Homogeneity<br>4. Innovation in lighting technology |
| Typical applications | Lenses, lamp covers and analysis systems |

# Back injection and back molding of sensitive decors
# DecoForm is the flexible solution

KraussMaffei's DecoForm manufacturing cells are engineered for fully automated production of plastic moldings with fabric or film surfaces, including handling the delicate decor materials. With this patented process, even the most delicate decor films and fabrics can be precisely positioned in the mold and back-injected.

### DecoForm® back injection

The DecoForm® back injection process is specifically suited for long, narrow components like pillar trim panels or door panels. DecoForm® back injection inserts a decor, film or material into the mold. The mold is closed and the component filled using cascade technology. After the filling or holding pressure phase, the clamping force can be released via a force release profile. This relieves the decor from the cavity pressure.

### DecoForm® back molding

The DecoForm® back molding process is particularly suitable for large-format, contoured parts. Specifically for door side panels, dashboard covers, seat-back shells, trunk linings and floor mats, decor materials with outstanding pressure and temperature sensitivity are used. To keep the cavity pressure to a minimum, the clamping unit opens to a compression gap. This gap is highly dependent on the decor, thermoplastic substrate and injection points.

### YOUR ADVANTAGES

- Cost-effective component manufacturing: 15-30% cost reduction compared to the conventional lamination process
- Flexible machine technology
- High process integration enables tasks to be completed in a few working steps
- High production output with compact floor space
- Environmentally friendly production processes: without use of solvents or adhesives
- Repeatable and reliable process

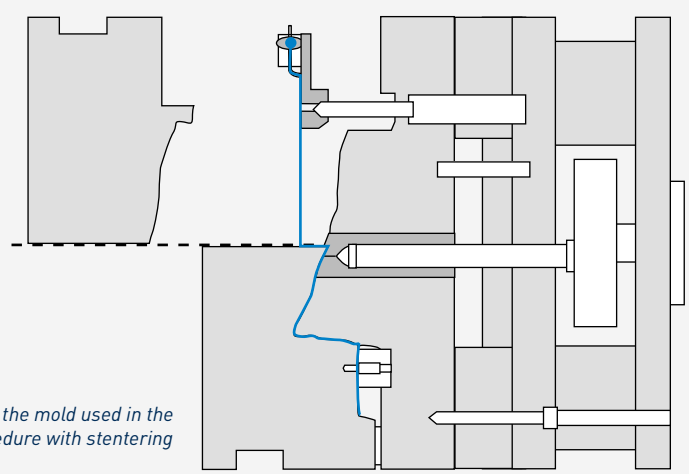

*Section through the mold used in the DecoForm procedure with stentering frame*

| | |
|---|---|
| ***Component*** | Door module with decorated area |
| ***Material*** | PP (LFG) with PP foam film |
| ***Technology*** | DecoForm |
| ***Advantages*** | – Decoration in a single pass<br>– Cost-effective manufacturing without an additional forming process<br>– Environmentally friendly manufacturing process without adhesive |

| Process | DecoForm |
|---|---|
| Description | **DecoForm – connecting textiles and decor with plastic efficiently**<br>With DecoForm®, KraussMaffei offers complete solutions for this application, including fully automated pre- and post-processing of the decor inserts in the injection molding cycle. In this patented process, even the most delicate decor films and fabrics can be precisely positioned in the mold, back-injected in a controlled process and molded into shape. DecoForm® allows all parameters for fixing and deformation of decors to be individually configured from the starting material and component design in the process for an optimum result. DecoForm® enables the processor to produce decorated components quickly, repeatably and economically on injection molding machines. |
| Features | **Decorative molding**<br>– Repeatable, one-step process<br>– Suitable for sensitive decor (TPO/PP foam film and carpets)<br>– Reduced logistics<br>– Low cavity pressure: even delicate decor can be processed<br>– High production output with compact floor space |
| Typical applications | Automotive, interior fittings of trains, aircraft and chairs in general |

# More polish with multi-components
# **Multinject makes plastics fancy**

High-gloss surfaces look nice by themselves, but the depth effect is lacking. This can be generated by applying a clear coat to the component. Multi-component technology, which has proven its value for decades, is ideal for this purpose, whether the part is a rotary table, index plate, SpinForm or transfer molding system.

Overpacking with a transparent component, such as PC or PMMA, is common in all industries in which exposed faces are given a fancy appearance. This can include trim strips or B-pillars in the automotive sector or housings or displays in the electronics sector.

The second layer has a thickness from a mere 1/10 mm to 2 mm depending on the desired depth effect and permitted material costs. This layer also has to be scratch-resistant, while the base material underneath should be impact-resistant and not too brittle.

### Diverse solutions from KraussMaffei

2-component technologies of the second design stage or higher are usually used, as three-dimensional overpacking usually takes place, but this does not work with core retraction technology. Rotary tables are suitable for one-sided overpacking. Alternatively, SpinForm technology can also be selected for correspondingly high quantities. Both take place using tried-and-tested technology from KraussMaffei with an electrically driven rotary unit and large media feedthroughs. In the latter case, hose feedthroughs are increasingly used as the solution, as they are highly robust and feature a natural thermal separation between water and oil. This makes it possible to implement high water temperatures very easily.

If it is also necessary for the outer material to flow partially around the edge, index plate technology is used in many cases. For this purpose, KraussMaffei offers highly solid electric drive systems for index plates.

If the component makes it necessary to transfer the article, KraussMaffei Automation comes into play. The multi-component technology combines all the benefits one could want in production. These include fewer manufacturing steps, and thus less scrap, with simultaneously higher quality and lower logistics effort.

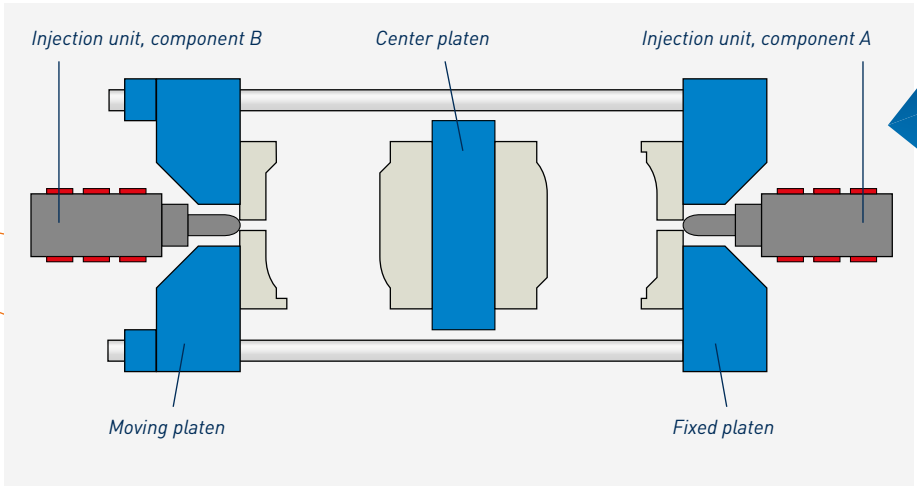


**YOUR ADVANTAGES:**

- Great design freedom
- High product quality
- Low reject rate

| | |
|---|---|
| ***Component*** | Front of a kitchen appliance |
| ***Material*** | ABS, PC |
| ***Technology*** | Multinject |
| ***Advantages*** | Upvalued plastic surfaces with depth effect |


| Process | Multinject |
|---|---|
| Description | **Multinject: Making plastics do more**<br>For multicomponent technology, two or more plastics are connected to multi-functional components in an injection molding process. This process combines color effects and various material properties in a specific, desired way. |
| Features | 1. Excellent integration of functions<br>2. Combined material properties<br>3. Integrated working steps |
| Typical applications | Consumer goods, packaging, automotive, medical/pharmaceuticals and electrical/electronics |

# For custom surface finishing
# Inmold Labeling (IML) and Film Insert Molding (FIM)

Premium-quality fronts, functionalized surfaces or - better yet - both at the same time? KraussMaffei offers the right combination of technologies.

**With this established technology, a distinction is made between two variants:**
IML (Inmold Labeling)
Non-preformed film inserts
FIM (Film Insert Molding)
Preformed film inserts

Both variants offer high process reliability and great flexibility in design with individual surface designs. The decor can be easily changed from shot to shot. A huge range of design options in the decor is possible:
– 3D surfaces with undercut geometry
– Design print
– Backlighting effects
– Haptic surfaces

A functionalization of the films with integrated conductor paths is possible.

**Benefit from a complete production solution from a single supplier:**
– Supply of film inserts in the magazine
– Film pretreatment, cleaning, activation
– Clean production conditions thanks to cleanroom technology
– Part removal
– Sprue removal
– Part trimming

## YOUR ADVANTAGES:

- High design variability
- Flexibility thanks to decor change from shot to shot
- Complete solutions from a single supplier
- Ready-to-install components immediately after demolding

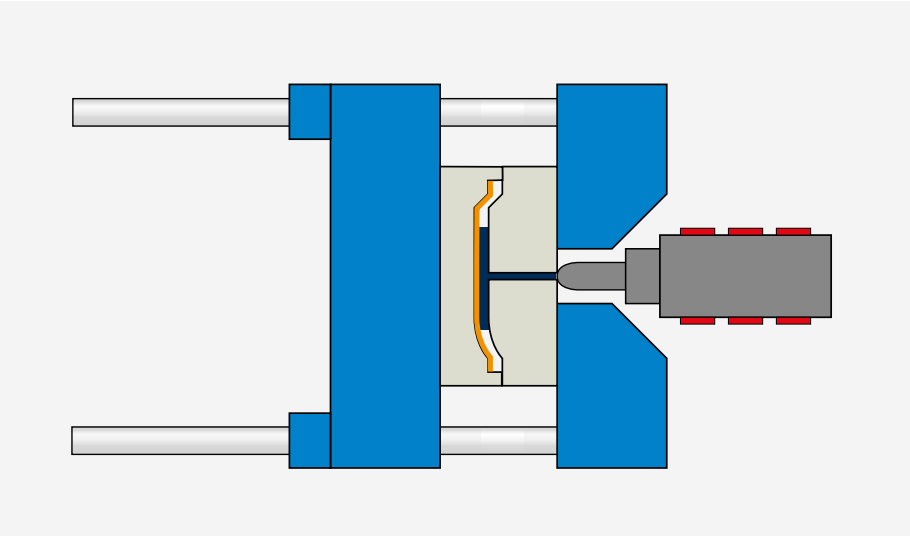

| | |
|---|---|
| ***Component*** | Automotive decor trim |
| ***Material*** | PC/ABS, PC |
| ***Technology*** | FIM with Multinject |
| ***Advantages*** | – High design variability<br>– Backlighting effect thanks to translucent film<br>– Functional with attractive surface aesthetics in single step |

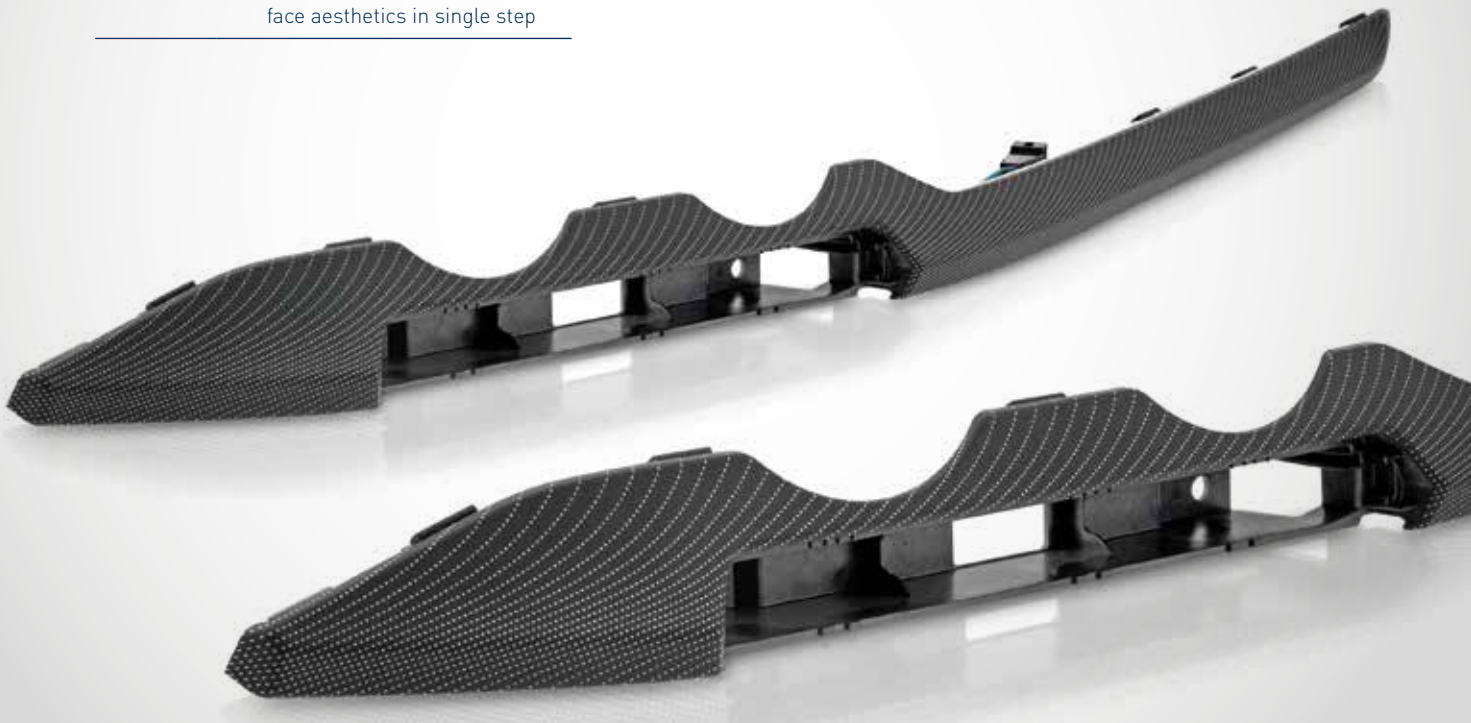

| Process | IML – Inmold Labeling and FIM – Film Insert Molding |
|---|---|
| Description | **For supreme surface finish**<br>With Inmold Labeling a prefabricated film is inserted into the injection mold and back-injected. The film remains on the part after demolding, thus creating a premium-quality and resistant surface. With the use of 3D preformed film inserts (Film Insert Molding) even complex and undercut 3D surfaces can be produced. |
| Features | 1. Sophisticated and striking surfaces in single-stage process<br>2. High design variability<br>3. Large surface variety thanks to flexible use of different decor films<br>4. Turnkey solutions with suitable automation incl. film supply, preparation, and subsequent treatment<br>5. Automated and precise insertion of films thanks to sophisticated gripper technology |
| Typical applications | Decor panels, cover flaps, housing parts, and functional displays in the area of consumer electronics, automotive, major appliances, and medical technology |

# Unique surface experience
# **Inmold Decoration (IMD)**

Scratch-resistant surface but also pleasing surface aesthetics:
Inmold Decoration by KraussMaffei.

This highly flexible production method offers an almost endless range of design possibilities in the decor:
- Piano black
- Design print
- Backlighting effects
- Haptic surfaces

The decor change is simple and individual surface designs can be realized. The functionalization of displays, for example, is possible with the additional integration of sensor films.

**Complete production solution from a single supplier**
- Integration of film periphery
- Clean production conditions thanks to cleanroom technology
- Part removal
- Sprue removal
- Part cleaning, removal of film residues
- Surface hardening in UV tunnel
- Optimal solutions for simple film change

***YOUR ADVANTAGES:***

- **High design variability**
- **Simple decor change**
- **Flexible**
- **Components with media-resistant surface immediately after demolding**

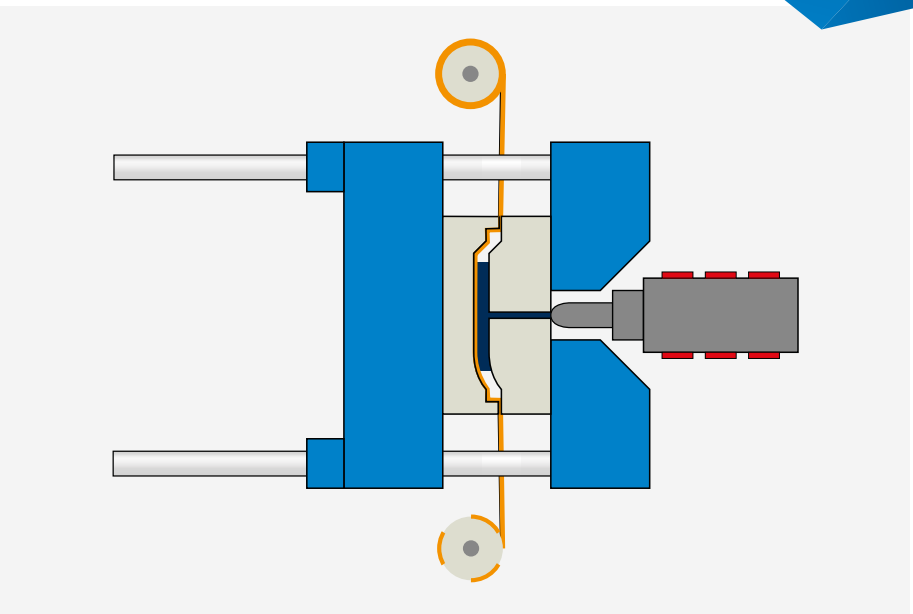

| | |
|---|---|
| ***Component*** | Climatronic cover |
| ***Material*** | PC/ABS |
| ***Technology*** | IMD Inmold Decoration |
| ***Advantages*** | – Premium-quality piano black surface, off-mold<br>– High surface quality<br>– Scratch- and media-resistant surface |

| Process | IMD – Inmold Decoration |
|---|---|
| Description | **Surface finishing with IMD**<br>A printed film is guided as an endless strip through the mold. During the back injection the decor print is transferred to the part, thus ensuring a scratch-resistant surface with appealing surface aesthetics. |
| Features | 1. Sophisticated and striking surfaces in single-stage process<br>2. High degree of flexibility in production thanks to quick change of film decor<br>3. Excellent integration of film periphery in injection molding machines of KraussMaffei<br>4. Turnkey solutions with suitable automation<br>5. Precise film positioning thanks to sophisticated feeding technology<br>6. Functionalization of parts possible with IML sensor films |
| Typical applications | Decor panels, cover flaps, housing parts, and functional displays in the area of consumer electronics, automotive, major appliances, and medical technology |


# OUR WORLDWIDE EXPERTISE IS YOUR ADVANTAGE **DIGITAL & SERVICE SOLUTIONS**

With your KraussMaffei machine, you have chosen a product that delivers the highest levels of productivity and reliability. In addition to our range of machinery, KraussMaffei focuses on comprehensive and future-oriented solutions, innovative business models and an innovative portfolio of digital products.

### Customer service at the touch of a button

The process of digital transformation is becoming faster and easier than ever for the customer. Our Digital & Service Solutions unit makes your production chain even more flexible and efficient with future-oriented solutions. KraussMaffei thus globally provides an all-inclusive customer service package and networks machines and processes with each other. Our global support offers a sound basis for your local long-term success.

### Individual challenges in mechanical engineering call for intelligent solutions

With our services portfolio, we support you throughout your machine's lifecycle with a strong focus on your specific needs. In order to satisfy your wishes, we offer you a wide range of solutions in order to ensure maximum availability and optimum productivity of your machines.

### Technology³ as a unique selling proposition

KraussMaffei is the only supplier in the world with a product range comprising the most important machine technologies for plastic and rubber processing: injection molding machinery, automation, reaction process machinery and extrusion technology. KraussMaffei is represented worldwide with more than 30 subsidiaries and over 10 production plants as well as about 570 commercial and service partners. Working together with our customers and partners, we are thus in a position to offer vast and unique expertise in the industry.

**You can find further information at:**
**www.kraussmaffei.com**

# KRAUSSMAFFEI – PIONEERING PLASTICS

**Extensive expertise from a single supplier**
KraussMaffei is one of the world's leading manufacturers of machinery and systems for producing and processing plastics and rubber. Our brand has been synonymous with cutting-edge technology for over 180 years. Our product range includes all technologies in injection molding, extrusion and reaction process machinery. KraussMaffei has a unique selling proposition in the industry as a result. By drawing on our proven innovative capacity, we can guarantee our customers sustained additional value over their entire value-adding chain through our standardized and individual product, process, digital and service solutions. The range of our products and services allows us to serve customers in many sectors including the automotive, packaging, medical and construction industries. We also supply manufacturers of electrical and electronic products and household appliances.

**At your service all over the world**
KraussMaffei is represented all over the world. Subsidiaries provide you with support in the countries shown in light blue. Our sales and service partners take care of you in the regions shown in white.

**You can find all contact information at www.kraussmaffei.com**

0.0 WE . 3rd edition 10/19 IMM 312A BR 10/2016 EN ··· KraussMaffei reserves the right to make technical changes ··· Printed in Federal Republic of Germany.

MORE THAN AN
ATTRACTIVE SURFACE

# PREMIUM SURFACES FOR GREATER BRILLIANCE AND DEPTH EFFECT

*kraussmaffei.com*