FOR ADVANCED
LIGHTWEIGHT COMPONENTS:

FIBER COMPOSITE SOLUTIONS

KraussMaffei

Pioneering Plastics

PROCESS

	Stressability	Temperature resistance/ Operating temperature	Dimensional stability/ Thermal expansion	Surface quality	Size/Format	Complexity/Geometry	Post-mold processing capability	Automation level	Production volume	
Process										
IM-SGF Injection molding, short fiber reinforcement	Good	Good	Good	Very good	Very good	Excellent	Excellent	Excellent	Excellent	Page 6
IM-LGF Injection molding, long-fiber reinforcement	Very good	Good	Good	Very good	Very good	Excellent	Excellent	Excellent	Excellent	Page 6
IMC Injection Molding Compounder	Very good	Very good	Very good	Very good	Very good	Excellent	Excellent	Excellent	Excellent	Page 8
FiberForm Shaping and encapsulating organic sheets with back injection	Excellent	Very good	Very good	Good	Very good	Very good	Excellent	Excellent	Very good	Page 10
PolySet BMC/SMC Injection molding of polyester BMC/SMC	Very good	Excellent	Excellent	Excellent	Good	Excellent	Very good	Excellent	Very good	Page 12
R-RIM Reinforced Reaction Injection Molding	Very good	Very good	Very good	Very good	Very good	Excellent	Very good	Very good	Very good	Page 14
SCS Structural Component Spraying	Excellent	Very good	Very good	Very good	Very good	Good	Very good	Very good	Very good	Page 16
FCS Fiber Composite Spraying	Very good	Very good	Very good	Very good	Excellent	Good	Good	Good	Good	Page 18
LFI Long Fiber Injection	Very good	Excellent	Excellent	Excellent	Excellent	Very good	Very good	Very good	Very good	Page 20
HP-RTM/C-RTM/T-RTM High-Pressure Resin Transfer Molding	Excellent	Excellent	Excellent	Very good	Excellent	Very good	Very good	Very good	Very good	Page 22
Surface-RTM Surface Resin Transfer Molding	Good	Excellent	Very good	Excellent	Excellent	Good	Good	Excellent	Excellent	Page 24
iPul Pultrusion	Excellent	Very good	Very good	Good	Good	Excellent	Excellent	Excellent	Very good	Page 26
Wetmolding	Very good	Excellent	Excellent	Good	Very good	Very good	Very good	Excellent	Very good	Page 28
Options										
CellForm Physical and chemical foaming (MuCell™)										Page 30
IMP In Mold Painting										Page 31

Excellent · Very good · Good

LIGHTWEIGHT CONSTRUCTION AND FIBER COMPOSITE TECHNOLOGY **ONE BRAND. LIMITLESS POSSIBILITIES.**

KraussMaffei is not just a machinery and systems expert in automated manufacturing of lightweight fiber composite components, but also has cross-process technological expertise over the whole value-adding chain. We are the only company in the world to offer the best manufacturing technology for the part specifications and target quantities of our customers while providing them with expert support throughout the entire manufacturing process.

Benefits of fiber composite technology at a glance:

- Wide-ranging fields of application
- Highest component requirements and property profiles
- Wide range of manufacturing processes

MOBILITY, ENERGY, ENVIRONMENT, LIGHTWEIGHT CONSTRUCTION – **OUR SOLUTIONS ARE USED ACROSS THE BOARD**

Wind power
The following processes are used here: FCS, C-RTM, HP-RTM, Wetmolding, iPul pultrusion, physical foaming (PET)

Sports equipment
The following processes are used here: IM-SGF, IM-LGF, FiberForm, Wetmolding, HP-RTM, CellForm, C-RTM

Rail transport
The following processes are used here: IMC, FiberForm, PolySet BMC/SMC, SCS, C-RTM, HP-RTM, Wetmolding

Agricultural machinery
The following processes are used here: IM-SGF, IM-LGF, IMC, FiberForm, PolySet BMC/SMC, R-RIM, FCS, LFI, SCS, HP-RTM, C-RTM, Wetmolding, CellForm

Aviation
The following processes are used here: IM-KGF, FiberForm, C-RTM, HP-RTM, Wetmolding, iPul pultrusion

Construction
The following processes are used here: IM-SGF, FCS, LFI, C-RTM, HP-RTM, Wetmolding, iPul Pultrusion

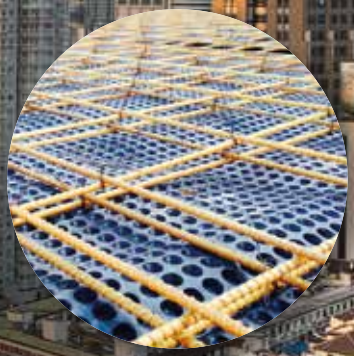

Infrastructure, building technology,building construction
The iPul pultrusion process is used here

Car manufacturing
The following processes are used here: IM-SGF, IM-LGF, IMC, FiberForm, PolySet BMC/SMC, R-RIM, LFI, SCS, HP-RTM, C-RTM, Wetmolding, CellForm, iPul pultrusion

Commercial vehicles
The following processes are used here: IM-SGF, IM-LGF, IMC, FiberForm, PolySet BMC/SMC, R-RIM, FCS, LFI, HP-RTM, C-RTM, Wetmolding

Familiar standard
Injection molding with short fibers (IM-SGF)

Thermoplastics are often reinforced with short fibers, usually glass fibers, to increase the stiffness and strength of the molded part. The ready-compounded pellets normally have a fiber content of 15 to 50 percent by weight. Materials used in series production of technical parts have a fiber content of 60 percent and more.

The highly abrasive ends of the glass fibers stick out of the half-melted pellets and cause increased wear on the plasticizing unit. KraussMaffei plasticizing units have a level of wear protection to match the application. This ensures that process parameters remain constant over a longer service life.

Processing of long-fiber-reinforced pellets (IM-LGF)

The use of long-fiber-reinforced thermoplastic pellets (LFT) significantly improves the mechanical property patterns of components. The fiber length is matched to the length of the pellets, i.e., usually it is 12 or 25 mm long. LFT pellets cost considerably more to manufacture than short-fiber pellets. It is therefore important that their length advantage and better reinforcing performance are not destroyed by over-vigorous processing.

Special screws and injection compression molding

Specially designed screws in the plasticizing unit reduce shearing and prevent fibers from breaking as well as excessive wear. Injection compression molding and customized mold geometry for ribs, radii and, above all, the hot runner system reduce damage to fibers during filling and shaping.

Impact-resistant components with LFT

Adding short glass fibers to a resin matrix produces parts with high rigidity, strong enough to take higher loads. The same can be achieved with long fibers and a low fiber content, meaning a lower weight. LFTs with higher fiber content are preferred for non-visible semi-structural components, such as frontends and instrument panel supports. These components need high impact strength in order to function despite impacts and vibrations. LFT components generally have fewer oriented fibers because the long fibers tend to block each other.

Multidisciplinary know-how for fiber-reinforced pellets

We combine our expertise in material processing, compounding of plastics, and injection molding to deliver impressive complete solutions. To supply our customers with solutions tailored to their formulations and processes over the whole process chain, we apply our extensive knowledge of processes from all essential application areas and our design skills as an experienced mechanical engineering company. We are experts when it comes to integrating reinforcement materials and fillers, such as glass fibers, talc, carbon fibers, calcium carbonate, barium sulfate, etc.

YOUR BENEFITS

- Short cycle times enable fully automated production of high unit quantities
- Improved mechanical properties and high stiffness compared to unfilled materials
- Can be combined with almost any other Injection Molding Machinery variants

Process	Injection molding of short and long glass fiber-reinforced thermoplastics
Description	Many thermoplastics can be reinforced with short glass fibers. The ready-compounded pellets normally have a fiber content of 15 to 50 percent by weight. They are processed in standard injection molding machines where the plasticizing unit has additional wear protection. By contrast, LFT with fiber/pellet lengths of 12-25 mm needs to be processed in machines with specially adapted screw geometries and usually also with an injection compounding process that avoids damaging the long fibers.
Features	1. Fully automated standard injection molding machine, slightly modified 2. Familiar processing method 3. Wide choice of materials from many different suppliers
Typical applications	Seat shells, instrument panel supports, door modules, technical underhood parts
Typical annual volumes	300,000 to 600,000 items

Examples of KraussMaffei products

Component	Transmission element
Material	PA 66 with 50 percent short glass fibers
Technology	Standard injection molding with wear-protected plasticizing unit
Benefits	– Withstands high and oscillating mechanical stress; high temperature resistance – Greater design freedom than for metals; acoustic damping – Weighs 50 percent less than an equivalent metal part

Component	Door module and interior trim of door
Material	Decor: TPO film with flexible foam Substrate: PP with 10 percent long glass fibers
Technology	Injection molding with a fiber-friendly screw; Single-stage process (DecoForm) as TPO film is directly backfoamed
Benefits	Highly cost-competitive because it combines visible parts and multifunctional parts with enhanced mechanical specifications

IMC combines compounding and injection molding – **Unbeatable cost savings for large-scale production**

The matrix polymer is first plasticized and mixed with additives in a corotating twin-screw extruder.

The reinforcing fibers are fed into the extruder, wetted with the molten thermoplastic, which naturally shortens them, and transferred to an injection piston. During the brief injection and holding pressure phase, the compound, which is produced continuously, is collected in a melt buffer. The continuous melt process guarantees consistent material quality.

Lower production costs with better properties

Direct compounding/injection with the IMC saves energy and material costs (0.3 to 1.0 €/kg cheaper than processing LFT pellets). As a result, it has widely replaced LFT in manufacturing semi-structural components. The mechanical properties of finished parts are also better because the process is less destructive to the fibers. The fibers are only processed once (instead of twice if pellets are used) and they are fed into the melt in the direction of processing. Process steps such as pelletizing, cooling, and remelting are omitted.

Automated and flexible for series production

The IMC process can be highly automated. Together with other key benefits, this makes direct compounding the process of choice for producing big runs of fiber composite parts. The integrated control ensures that the formulation and the material quality are constant and that the process is fully documented. Changes to the formulation are simple so that the process can be adapted flexibly to meet different part specifications. The IMC system is just one example of productive interdisciplinary collaboration at KraussMaffei – it successfully merges injection molding know-how with expertise in compounding and extrusion.

YOUR BENEFITS

- Short cycle times enable fully automated production of high unit quantities
- Long fibers for better material properties and high stiffness
- Lower material costs

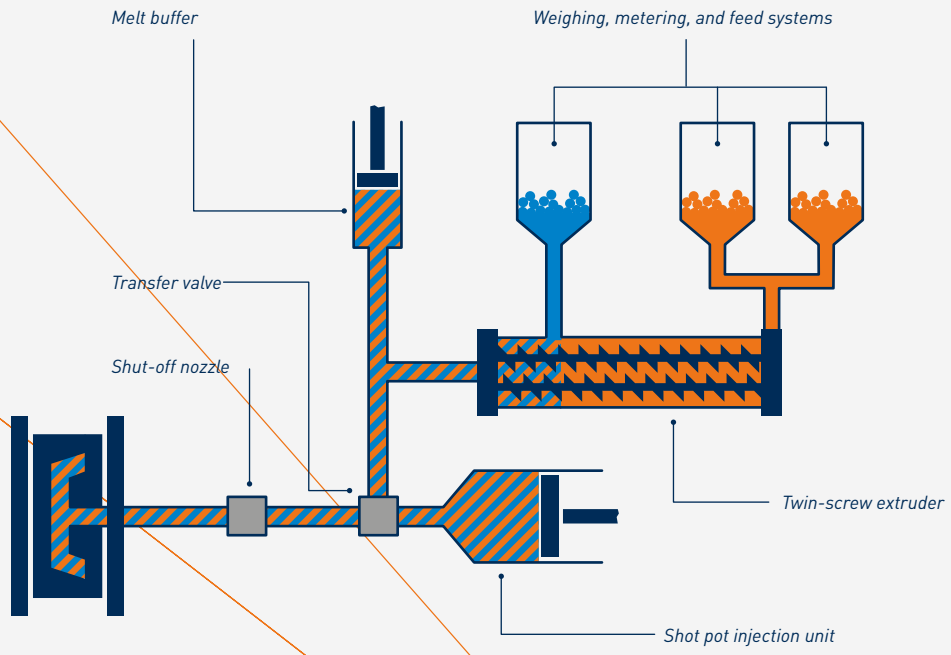

Process	Direct compounding with the IMC (D-LFT-IM)
Description	The IMC - Injection Molding Compounder - combines continuous compounding, typical of extrusion systems, with injection molding, which is a discontinuous process. Long-fiber-reinforced thermoplastic components can thus be produced with better properties and at a lower cost than using pellets.
Features	1. Highly automated process 2. Flexible adaptation to changing requirements 3. Compounding using low-cost standard raw materials
Typical applications	Frontend carriers, transmission elements, front partitions, battery wells
Typical annual volumes	300,000 to 600,000 items

Examples of KraussMaffei products

Component	Assembly carrier (frontend)
Material	PP-GF30, long-fiber reinforcement
Technology	IMC direct compounding with metal insert in upper belt for energy distribution in an offset frontal collision
Benefits	– As a module carrier multifunctional part; good energy absorption, especially when there is oscillation – Good impact strength due to long-fiber reinforcement – Very cost-competitive process for large-scale production as there is no intermediate cooling and remelting

Component	Acoustic damping mats
Material	PP EPDM filled with barium sulfate
Technology	IMC direct compounding with addition of filler followed by application of PUR acoustic flexible foam
Benefits	– Lower part weight through acoustic-defined wall thickness reduction – Higher filler content and good homogeneity at the same time – No trimming waste

Thermoplastic structural components **with functional integration**

To further improve the strength of fiber-reinforced injection molded parts, KraussMaffei combines injection molding with thermoforming of organo sheets in the FiberForm technology.

Fabric made of endless fiber in a thermoplastic matrix is heated, shaped in the injection mold and then back injected. This process can be used to add ribs for extra stiffness and to integrate other functions.

Fast and highly automated

Cycle times are similar to typical values for injection molding (around 30 seconds) and are chiefly determined by the cooling time in the mold. The process can be seamlessly integrated into an injection molding operation. In other words, FiberForm technology is ideal for manufacturing lightweight structural components for large series production.

Highly-automated manufacturing cells

Like standard injection molding, FiberForm can be easily automated. The outcome is compact, fully automated manufacturing cells.

Versatile process

Like injection molding, FiberForm can be combined with almost all special manufacturing processes. This opens up infinite potential for functional integration and component design.

YOUR BENEFITS

- Parts are demolded with their final contour, no post-processing required
- Short cycle times, typical of injection molding processes
- Fully automated manufacturing process
- IR oven integrated into MC6 control system

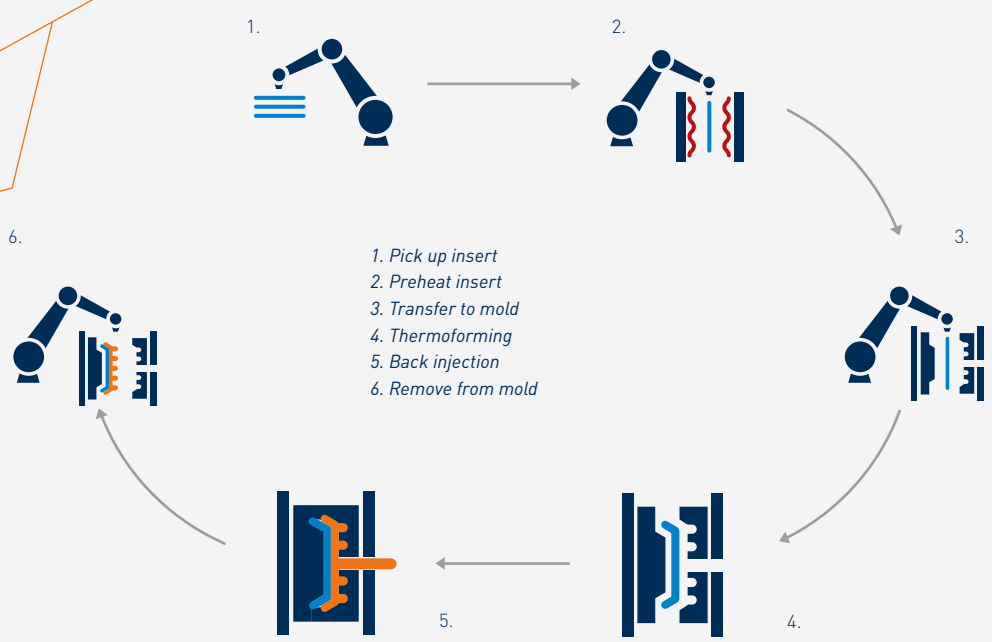

Process	FiberForm – Thermoforming and back injection of organo sheets and UD tapes
Description	Converting and over-molding of fiber-reinforced thermoplastic semifinished products
Features	1. Thermoplastic molded parts with fiber reinforcement 2. Highly automated and reproducible manufacturing process 3. High functional integration as part of the injection molding process
Typical applications	Seat shells and backs, instrument panel supports, soft top compartments, side impact protection, underbody assemblies door modules, technical underhood components, battery supports, semi-structural components, center armrests
Typical annual volumes	100,000 to 1,000,000 items

Examples of KraussMaffei products

Component	Predevelopment project: Door impact beam
Material	PA 6 GF60 + PA-GF 50-50 organo sheet
Technology	FiberForm + formed bolt holes
Benefits	– High mechanical strength – Assembly-ready – Short cycle times

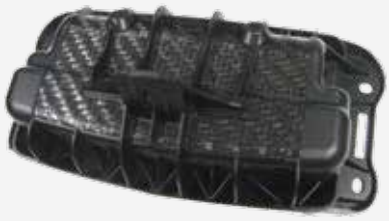

Photo: TAKATA AG

Component	Predevelopment project: Passenger airbag unit
Material	PA 6 GF30 + PA-GF 50-50 organo sheet
Technology	FiberForm
Benefits	– Organo sheet can be shaped easily – Cost-competitive technology for large-scale production – High mechanical strength

Fully automated processing
of BMC/SMC molding compounds

Thanks to their very low viscosity, thermosets are especially suitable for wetting fibers to produce fiber-reinforced plastics (FRP). Due to their high temperature resistance, thermoset FRP parts are still regularly used as substitutes for metals.

Sheet Molding Compound (SMC) and Bulk Molding Compound (BMC) are used for very stiff, precision parts, which are often painted. The broad range of use from low temperatures up to 180 °C enables a diverse field of applications as well as in-line painting of Class A surfaces.

The raw material that's a little different

The doughy polyester or vinylester-based resins are reinforced with fiber. BMC is often reinforced with short glass fibers, SMC with long glass fibers (25–50 mm). The compounds are supplied ready-to-use.

Unique conveyor system – reliable injection molding process

The AZ 50/100 automatic feed system and the PolyLift ensure fully automated, bubble-free material feed without any interruptions to the cycle. This increases productivity and the number of good parts.

The doughy material is removed from its packaging and placed directly, without interrupting the production cycle, into the feed hopper of an injection molding machine. The rotating action of the hopper and the feed screw transports the material into the heated plasticizing unit. After injection, the precisely metered thermoset cures in the hot mold to produce the finished part.

YOUR BENEFITS

- Precision transport thanks to closed-loop control of stuffing pressure, constant processing conditions
- Refilling without interrupting process cycle
- Outstanding material homogenization, fiber-friendly processing
- Fully automated, bubble-free material feed

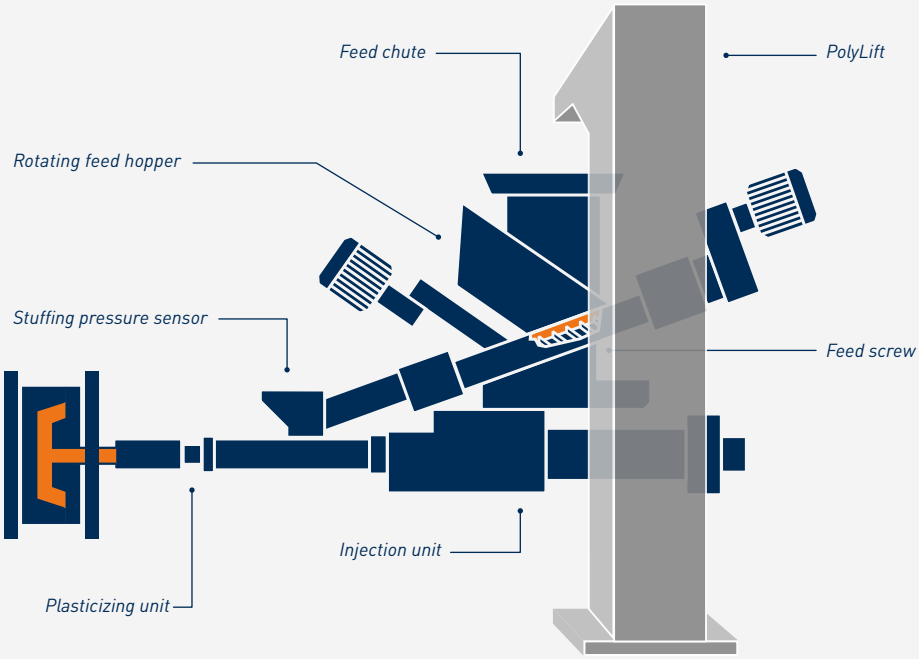

Process	PolySet – continuous injection molding of polyester DMC molding compounds (BMC, SMC)
Description	PolySet – process for polyester dough molding compounds that are not free-flowing, for small to medium component sizes
Features	1. Unique feed method for continuous material transport of the polyester dough molding compounds, regardless of the material's form and consistency 2. Robust construction, long service life even processing highly abrasive materials 3. Special, material-specific machine portfolio for thermosets
Typical applications	Valve caps, headlight reflectors, oil sumps, brake pistons, medical equipment, circuit breakers
Typical annual volumes	200,000 to 500,000 items

Examples of KraussMaffei products

Component	Headlight reflector
Material	BMC made of UP resin with short glass fibers; LS setting for high dimensional accuracy
Technology	PolySet injection molding of BMC
Benefits	– Very high reproducibility thanks to good process monitoring – Class A surface with post-mold painting – Excellent dimensional stability over the whole operating temperature range

Component	Throttle valve housing
Material	BMC of UP resin with short glass fibers
Technology	PolySet injection molding of BMC
Benefits	– Low component tolerance (0.02 mm) – Complex geometries with no post-mold processing – Operating range from -40 °C to 150 °C – Good thermal insulation properties for winter application

Perfect surfaces for low wall thicknesses **with highly reactive PUR systems**

In R-RIM, short fibers (glass, carbon, wollastonite) or fillers are added to the polyol before processing. The PUR mix is poured into the closed mold where it cures quickly.

R-RIM on wear-resistant machines

The filler is mixed into one of the PUR components, in general the polyol, in a special premixing station. A piston metering machine is used. In the mixing head, the filled polyol is mixed – intensively and at high speed – with the isocyanate during the shot and the PUR mix is injected into the closed mold. R-RIM is the only process for manufacturing PUR composite products where the reinforcing material is actually mixed into one of the PUR components. To reduce the abrasion risk, the mixing head and the metering system for the filled component are treated for wear resistance.

Volume parts for inline painting

The R-RIM process produces parts with excellent material properties. It has proven a cost-competitive process for large scale production. Using fast-reacting PUR systems, cycle times can be as short as 90 seconds. Adding short fibers to the resin improves the stiffness, dimensional stability under heat, and the thermal expansion coefficient of the finished parts, making them ideal for car bodywork elements. Stable, reliable production systems and minimal post-mold processing meet the requirements of the automotive industry.

New lightweight R-RIM technology

Newer developments expand the range of possible applications. Recycled carbon fibers improve the mechanical properties. Glass microbeads decrease the density and thus the weight of components. This also provides an optimal surface finish up to Class A.

YOUR BENEFITS

- Dimensional stability and inherent stiffness even at high temperatures
- Good paintability, even at temperatures up to 180 °C, online painting is possible
- Low investment in molds and tooling

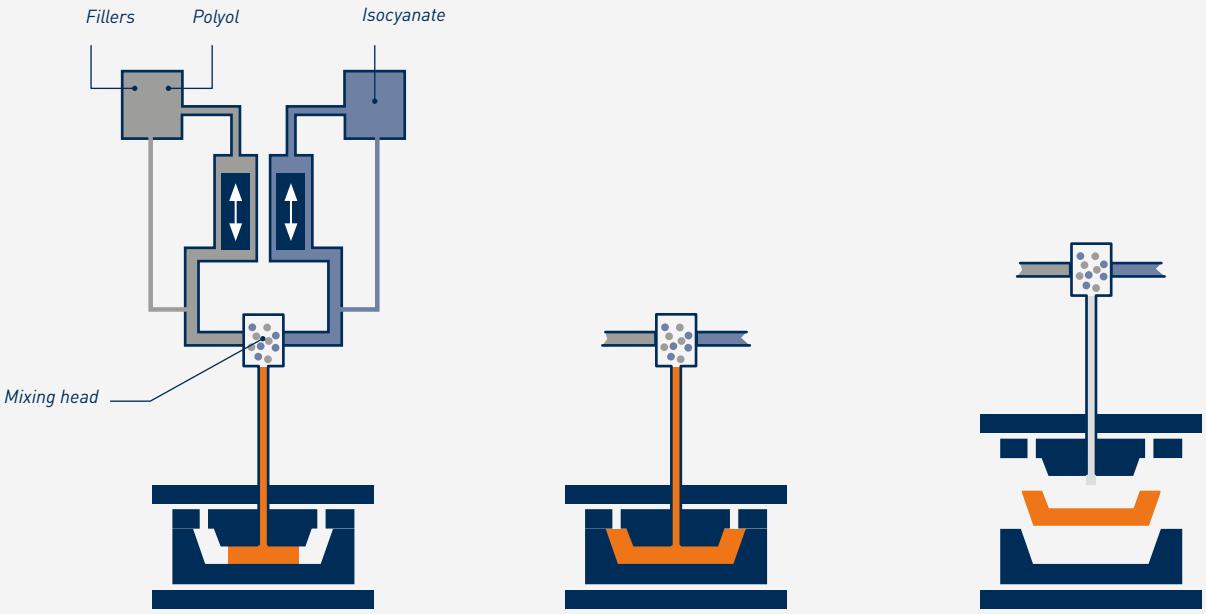

1. Inject into the mold *2. Reaction in the mold* *3. Demolding*

Process	R-RIM processing of filled polyurethane components
Description	Fast-reacting PUR components are filled with short fibers, mixed at high pressure, and the reactive mix is injected into the closed mold
Features	1. Highly automated process 2. Short reaction and cycle times < 90 seconds 3. Freeflowing materials can be processed into thin walled parts < 2 mm
Typical applications	Mudguards, door panels, body components, technical underhood components
Typical annual volumes	10,000 to 100,000 items

Examples of KraussMaffei products

Part	Car mudguard
Material	Polyurethane system with 22 percent wollastonite
Technology	R-RIM, process on a multi-station system
Benefits	– High dimensional stability of the components, tight length tolerances – Greater design freedom than for metals – Adequate flexibility and resilience

Component	Door sill
Material	PUR system with 22 percent wollastonite and 1 percent hollow glass spheres
Technology	R-RIM process, automated part removal and finishing
Benefits	– High dimensional stability – Low weight, wall thickness < 2 mm – Paintable inline – Excellent impact strength

Low component weight
with high bending stiffness

In SCS processes, layers made up of fiber mats and honeycomb cores are sprayed with unreinforced PUR, injected into a mold and pressed into shape.

Thin layers on lightweight honeycomb cores

This further development of LFI/honeycomb technology reduces the thickness and weight of the cover layers to further optimize the lightweight construction. First a sandwich structure is made by putting the fiber mats on both sides of the honeycomb core. The sandwich is then sprayed with PUR on both sides. Next the frame holding the sprayed sandwich is inserted into the mold, which is then shut. During pressing, the fiber mats are impregnated with PUR. As the PUR cures, the fibers adhere to the fiber core.

Core plus outer layers produce extremely light, stiff parts

With substrate and core layers matched as regards material properties and part geometry, it is possible to produce extremely light parts which are also very rigid.

The SCS process has huge potential to produce lightweight parts and this potential is far from being exhausted. Fiber mats with endless fiber content and thicker PUR layers sharply increase the mechanical strength of the load-bearing edge areas.

Decorated surface on both sides

In the applications presented here, the decorative elements are positioned in both mold halves before pressing. The SCS process produces parts with ready-to-use surfaces.

YOUR BENEFITS

- Optimized lightweight construction for moderate strengths
- Low operating costs, low material consumption
- High-quality finish surfaces possible on both sides
- Short cycle times through fast toggling between flat fan and circular jet nozzle

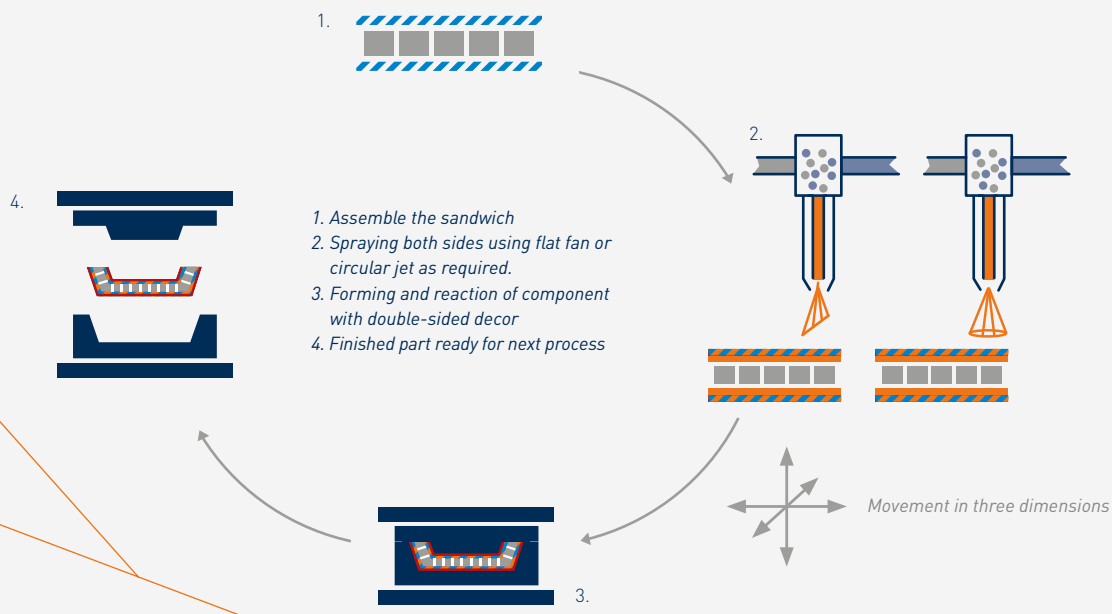

Process	SCS – Structural Component Spraying with reactive PUR
Description	Spraying a prefabricated sandwich pane with PUR mixture, transfer to mold, curing in the closed mold
Features	1. Fiber mat in a holding frame sprayed on both sides with PUR 2. Combines easily with in-mold surface decoration 3. Lightweight component with honeycomb core
Typical applications	Rear shelves, cargo area floors, large laminated parts, sun roof shades
Typical annual volumes	10,000 to 300,000 items

Examples of KraussMaffei products

Component	Sunroof shade
Material	Substrate: glass mat with PUR paper honeycomb core – glass mat with PUR; surface: both sides non-woven with barrier film
Technology	Structural Component Spraying (SCS)
Benefits	Cost-competitive one-step process

Component	Rear shelf
Material	Substrate: glass mat with PUR paper honeycomb core – glass mat with PUR; surface: both sides non-woven with barrier film
Technology	Structural Component Spraying (SCS)
Benefits	Weight-optimized, rigid component

Low mold costs, automated material pouring by means of robot, many variants – **ideal for short runs**

FCS Fiber Composite Spraying is a very flexible process for small scale production. By pouring a combination of different PUR layers, it is possible to produce composite parts exactly matched to specific applications.

Each different layer can be made completely or partially of compact or foamed material, with or without fiber reinforcement. Almost any wall thickness can thus be created. Only one mold half is required for manufacturing. Because of the lower initial investment, FCS is especially suitable for small series production.

Modular system concept

In the simplest case, it is possible to use just a 2C spray mixing head with the appropriate metering machine. An optional H_2O metering unit makes it possible to further vary the PUR system between compact or foamed. A 4-component mixing head allows even more variability. Fibers are always metered coaxially into the PUR spray jet, ensuring that fibers are always optimally wetted with PUR. The glass fibers can come from rovings and be cut to length during the process, or ready-cut glass can be used. In most applications, fiber length is between 5 and 20 mm and the fiber content in the part can be up to 25 percent.

Stiff sandwich parts for a minimal investment

The FCS process is ideal for high-strength, very rigid, large-format, visible parts required in small quantities. The process uses only a simple negative mold without a mold carrier. Although this is an automated, highly repeatable process, the tooling and investment costs are minimal. The surfaces of the medium-sized or large parts can be finished with a thermoformed film or using IMP (In Mold Painting).

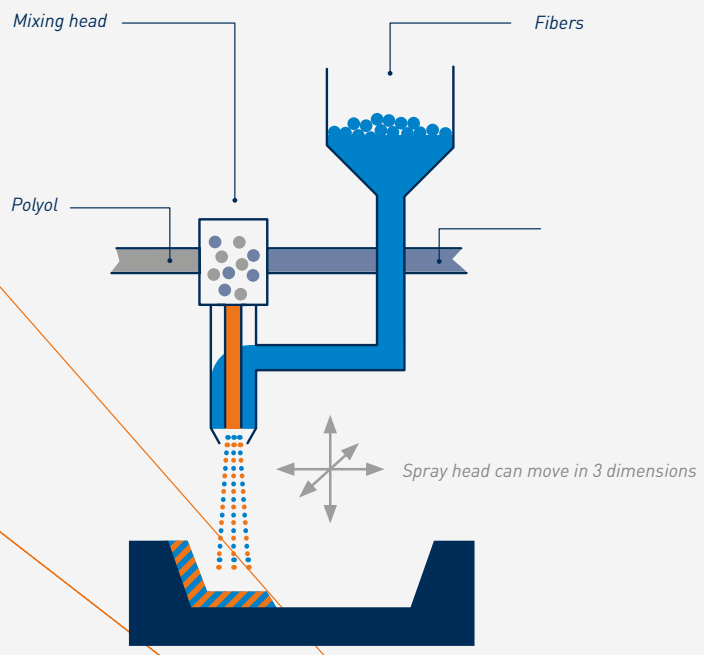

Process	FCS – Fiber Composite Spraying
Description	Spraying a layer of fibers and PUR system into an open mold. Curing takes place by means of exposure to air
Features	1. Variable, application-specific layer structure (filled, unfilled, and foamed layers) 2. Spraying into the negative mold – simple, lower-cost molds 3. Fiber content up to about 25 percent, fiber lengths between 5 and 20 mm
Typical applications	Fenders, engine covers, large-format hoods and covers for machines
Typical annual volumes	5,000 to 10,000 items

YOUR BENEFITS

- Cost-effective small scale production, even for very large components
- First-class surfaces through simple process combinations, for example with in-mold painting (IMP)
- High stiffness and strength thanks to multiple layers

Examples of KraussMaffei products

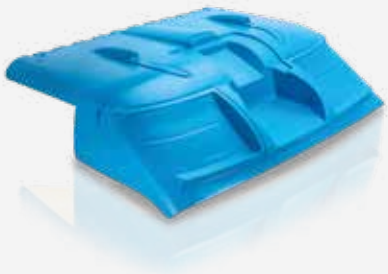

Component	Hood for ambulance
Material	PUR with long-fiber reinforcement
Technology	FCS Fiber Composite Spraying; visible side produced previously in the same mold with In Mold Painting (IMP)
Benefits	– Extremely cost-competitive process – Automated production for small series – Premium surface quality

Component	Car rear shelf
Material	PUR with long-fiber reinforcement and locally higher fiber content
Technology	FCS, partly in multiple layers
Benefits	– Stiff, weight-optimized component with a sandwich structure (with honeycomb core) – Variable adaptation of strength (fiber content) – Low initial investment

Lightweight components with high impact resistance **not just for the automotive sector**

In the LFI (Long Fiber Injection) process, continuous fibers from a roving are fed into a cutter, where they are chopped to length and separated into the individual filaments by a blower. Directly downstream of the cutting unit, the fibers are united with the PUR mixture from the mixing head and wetted.

The fiber/PUR compound is poured into the open mold, under robot control, using a sharply focused spray cone. Once the mold is filled, it closes and the compound cures.

Specific localized properties

The fiber lengths can be varied between 12.5 and 100 mm online. During discharge, the fiber content can continuously change between 0 and 50 percent, with 50 percent being the limit for good impregnation. Today the most commonly used PUR systems are either compact or foamed. This means that the property profile of LFI is comparable with that of SMC.

Stable and very light

Long fibers, freedom to design part geometries, and the versatility of PUR systems mean that the application spectrum is very wide. LFI parts can vary from a small trim part for a car interior to a large structural part with a Class A visible surface.

Since this is a PUR process where mold cavity pressures are < 10 bar, LFI can be used at the same time to produce a high-strength sandwich element with a honeycomb structure as the core layer. Typical products here are rear trays for cars or very large partitions.

YOUR BENEFITS

- First-class surfaces with simple process combinations (IMP, film inserts)
- High strength values (fiber content up to 50 percent, fiber lengths 12.5-100 mm)
- Moderate mold and system costs
- Output controlled dependent on speed

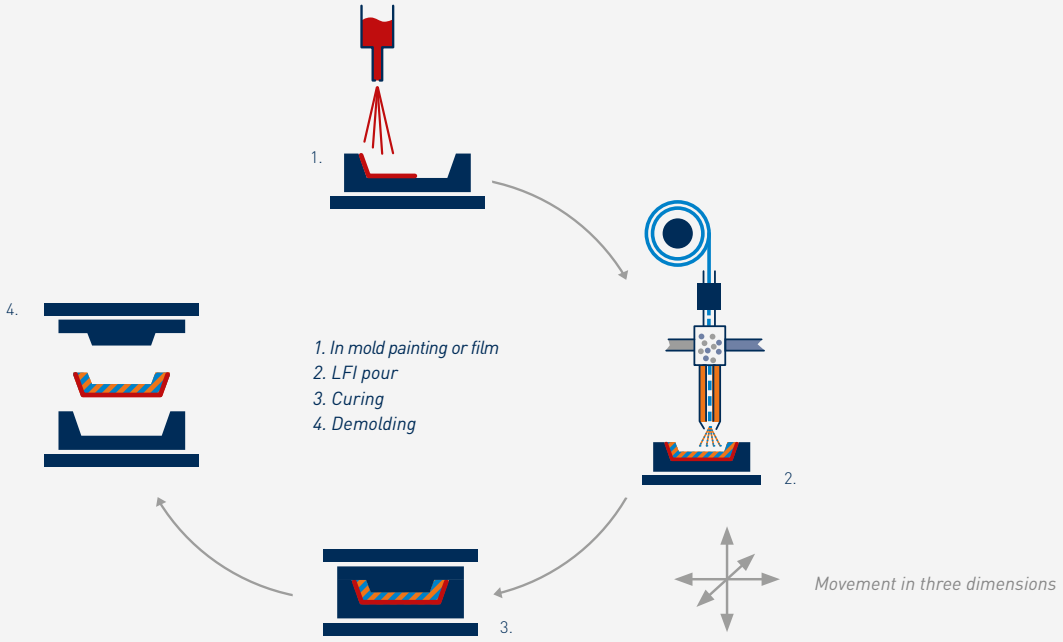

Process	LFI – Long Fiber Injection Molding with reactive PUR
Description	Fiberglass rovings are chopped close to the mixing head and wetted with the PUR mixture as it is poured into the open mold. The mold is closed while the PUR cures
Features	1. Fiber content and length can be varied locally 2. Easy integration of inserts (e.g. clips and other junction elements) 3. Attractively priced raw materials, minimal fiber mixing
Typical applications	Engine hoods, roof elements, side trims, covers, flaps, instrument panel supports
Typical annual volumes	10,000 to 120,000 items

Examples of KraussMaffei products

Component	Wheel housing (agricultural implement)
Material	PUR with long-fiber reinforcement
Technology	LFI with thermoformed decor film (green) and R-RIM (gray); fiber length and volume content can be locally adapted to the component requirements
Benefits	– Mechanical strength can be varied locally to suit part specifications – Cost-competitive process for volume production – Class A surface

Component	Combine harvester engine hood
Material	PUR with long-fiber reinforcement
Technology	LFI, In Mold Painting for visible side
Benefits	– Very large-format structural component – Suitable for impact resistance – Ribbed structure to increase strength – Painted visible part (IMP)

Very light, very strong
high-performance lightweight components

In HP-RTM (High-Pressure Resin Transfer Molding), the first step is building up a fiber preform.

This consists of layers of carbon or glass fibers; the fabric layers can be stitched or fixed together with a binder to keep them correctly aligned. How the layers are put together depends on the loads the structural component will later be subjected to; preforming could be used. This preform is placed in the mold, the mold is then closed and evacuated. Then a very low-viscosity, reactive epoxy resin, polyurethane, or cast polyamide is injected into the cavity at high pressure ensuring that each individual fiber is wetted and that there are no air gaps.

The C-RTM (Compression Resin Transfer Molding) process differs from the HP-RTM (High-Pressure RTM) process essentially by having the resin mixture fed into the mold when it is slightly open instead of closed. Thus the mold is not completely closed during the feeding. Consequently, the preform is already partially saturated by resin. The feeding is followed by a compression stroke, which presses the resin through the preform, causing it to become completely saturated.

Outstanding strength

The HP-RTM process produces extremely light structural parts that meet the highest specifications, complying for instance with car crash test standards. This process is already established in the aerospace industry, mechanical engineering, and the automotive industry. The HP-RTM process can produce parts with fiber content up to 50 percent.

High pressure under heat

Generally, PUR, epoxy, and cast polyamide can be used as the matrix material. KraussMaffei offers the right machine for each of these materials. If PUR systems are processed at temperatures up to a maximum of 80 °C, the epoxy resins or cast polyamides used in HP-RTM require machines modified to process materials at temperatures up to 120 °C.

YOUR BENEFITS

- Lightweight parts to meet highest specifications, approximately 50 percent lighter than steel
- Paintable components for visible applications
- Fully automated series production possible from preform to post-mold processing
- New production concept for functional components

1. Semifinished product from a roll → *2. Handling the assembled semifinished product* → *3. Transfer to the preform station* → *4. Preforming* → *5. Transfer of preform to HP-RTM station*

HP-RTM

6. Create a vacuum (optional) → *7. Resin injection* → *8. Curing* → *9. Component removal*

C-RTM

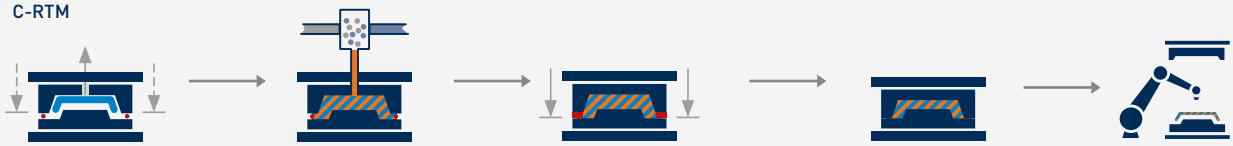

6. Mold closing upon compression stroke, vacuum (optional) → *7. Resin injection into slightly open mold* → *8. Compression* → *9. Curing* → *10. Component removal*

Process	HP-RTM – High-Pressure Resin Transfer Molding C-RTM – Compression Resin Transfer Molding T-RTM – Thermoplastmatrix Resin Molding
Description	**HP-RTM:** Fiber mats or fabric are preformed and then positioned in the mold. The mold closes, the resin is injected and cures in the closed mold. **C-RTM:** Fiber mats or fabric are positioned in the mold. Resin is added in the slightly open mold and the reaction occurs in the closed mold. **T-RTM:** Preformed textile semifinished product is infiltrated with ε-Caprolactam reactive mixture. In-situ polymerization and curing to polyamide 6.
Features	1. Virtually unidirectional reinforcement with endless fiber 2. High-pressure technology allows the use of fast-curing systems 3. High fiber contents of up to 50 percent
Typical applications	Structural components, sidewall panels, base trays, front-end carriers, crash boxes, carbon design parts, high-performance lightweight fiber composites, structural components, leaf springs, rims
Typical annual volumes	10,000 to 120,000 items

Examples of KraussMaffei products

Component	Roof (visible carbon)
Material	Carbon fiber fabric with epoxy resin as matrix
Technology	HP-RTM
Benefits	– Structural component in the visible range – Premium quality sporty carbon look – Trailblazer for other lightweight components

Component	Leaf spring
Material	Fiberglass preforms with epoxy matrix
Technology	HP-RTM
Benefits	– 60 percent lighter in production than steel leaf springs – Corrosion-resistant, better driving characteristics – Suitable for series production

Fiber-reinforced visible components **paintable without post-mold processing**

The surface resin transfer molding process enables cost-effective manufacturing of paintable fiber-reinforced visible components for vehicle manufacturing for series applications.

With surface resin transfer molding (surface-RTM), the component obtains not only its shape in one and the same mold, but also an additional, completely smooth, and paintable surface. The other production steps are similar to those of other RTM processes.

First of all, a preform is established from continuous fiber textiles. This is secured with a thermoplastic tie and inserted into the molding tool. The mold is closed once and evacuated. Then it is opened a fraction to inject the polyurethane matrix system. By closing the mold the fiber material is now fully impregnated with the resin and pressed into the desired mold. Then the mold is opened again by a defined gap. Now the surface material – also PUR-based – is injected to close the high-gloss polished mold again. Following the expiry of the reaction time, the robot removes the completed fiber composite part with its paintable surface from the mold. After it has cooled, the only thing that remains is the trimming, also in a fully automated KraussMaffei milling center.

Special seal

The surface resin transfer molding mold is equipped with a special seal system. It makes it possible to use a vacuum also with a slightly opened mold. Sophisticated sensors monitor and regulate optimum filling of the mold. This provides information about the component quality.

YOUR BENEFITS

- Premium quality, paintable surface for CFRP automotive outer parts
- Combination of high-performance lightweight components with quality surface finish
- Minimal post-processing (near-net shape)

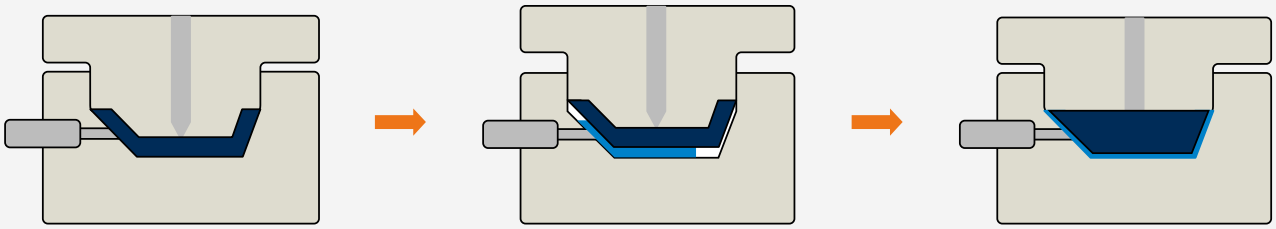

1. The preform (reshaped fiber material) is inserted into the cavity
– The cavity is closed
– The preform is completely soaked in resin
– The substrate (PUR and CF) cures

2. The cavity is opened slightly
– The surface material (PUR) is injected
– The cavity is closed again

3. The surface material cures
The component is then demolded again

Process	Surface-RTM – Surface Resin Transfer Molding
Description	Flow-coating of the RTM component surface with a PUR layer directly in the cavity
Features	1. Suitable for series production – cycle times 5 to 7 minutes 2. Suitable for large-format, contoured parts (e.g. for utility vehicles) 3. Substrates with different clamping surfaces and press tonnages are available 4. Paintable components without any further intermediate steps
Typical applications	Sidewall panels, roof modules, door outer sides
Typical annual volumes	Up to 100,000 items

Examples of KraussMaffei products

Component	Roof module (Roding)
Material	Carbon-fiber continuous textiles with PUR matrix and PUR-based surface
Technology	Surface-RTM
Benefits	– Suitable for external visual field – Paintable without post-mold processing

Fiber-reinforced pultruded profiles **fully manufactured on pultrusion machines from KraussMaffei**

In conjunction with our subsidiary Pultrex, we provide complete systems for industrial manufacturing of pultruded profiles. Here, depending on the requirements, systems with open tubs or and encapsulated injection box (iPul) are used. Our extensive experience and the production speed of up to 3 m/minute make the process suitable for a wide variety of applications.

During pultrusion, rovings, i.e. continuous fibers of glass, carbon, or aramid, are soaked with the matrix material and then shaped in a heated mold. Grippers continuously pull the cured profile further on the other side of the mold.

Profiles for many applications

In addition to the construction industry, the technology is also an attractive method for manufacturing wind turbines, vehicles, and airplanes in many industries.

High-speed: iPul technology

iPul accelerates this process compared to traditional production methods by scales of up to 3 m/minute. At the same time, the closed injection box avoids any unwelcome odors which arise during the manufacture with open baths.

Core component: Injection box

The core component of iPul is the injection box. The fibers of the final profile shape are already approximated here. The rovings run into the injection box via the fiber routing. There the fibers are soaked in thermoset epoxy resin, polyurethane, or polyamide. The use of fiber fabrics or woven fabrics as a base gives particularly stiff components or surfaces.

YOUR BENEFITS

- Cost-effective production of structural components with premium quality properties
- Complete systems from a single source, tailored to materials and product
- KraussMaffei and our subsidiary Pultrex are your experienced partners for system development and service

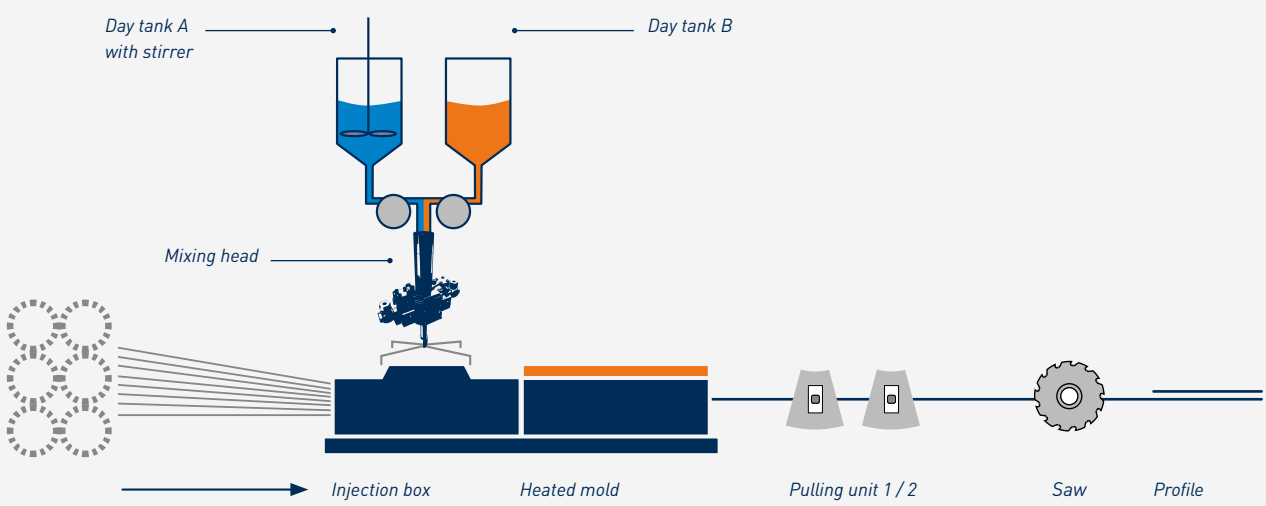

Process	Pultrusion – pultrusion of fiber-reinforced profiles
Description	Manufacturing profiles made from continuous rovings
Features	1. Suitable for series production – production speed up to 3 m/minute 2. Suitable for resilient components indoors and outdoors 3. Material combinations possible for diverse purposes
Typical applications	Profiles in the automotive sector, window profiles, concrete reinforcements, seat struts Airplane frames, rotor blade reinforcements, utility poles (masts)
Typical annual volumes	10,000 to 120,000 meters

Examples of KraussMaffei products

Photo: Evonik

Component	Concrete reinforcement
Material	Epoxy resin glass fiber
Technology	Pultrusion
Benefits	– Stable and corrosion-resistant alternative to steel

Photo: Covestro/Internorm

Component	Window profile
Material	Polyurethane glass fiber
Technology	Pultrusion
Benefits	– High insulation capability – Dimensionally stable – Corrosion- and wear-resistance

Structural components
with and made of recycled material

The Wetmolding process provides another alternative for the series production of fiber-reinforced lightweight components.

This involves fixing a pile of fiber mats made of carbon or glass fibers in place as an unworked piece, unformed and flat, outside of the mold. Then the reactive resin is thinly applied to the fiber pile in layers. As soon as the fibers are covered with resin, the fiber pile with the layer of resin is transported into the mold and compressed there by closing the mold. This is where the fiber mats are preformed and the component is cured.

Manufacturing with recycled fiber mats

Recycled fiber mats can be used in the Wetmolding process. The manufacturing process for the fiber mats can reuse materials such as the waste product from cutting fiber mats made of continuous fibers. In the process, the individual fibers are coated with a binder and formed into mats again. However, the fibers are no longer aligned, but instead statically distributed. The flow resistance would be extremely high for impregnation in a closed mold, which is why the resin is added outside of the mold.

Short cycles and fast reaction times

Whatever the material being processed, KraussMaffei machines are ideally suited for processing fast-reacting systems; the mixing heads are all engineered for high-pressure processing. This leads to a very good mix of fast-curing resin systems. The mixing head is self-cleaning. We also offer an extra module to meter in an internal release agent directly at the mixing head. This ensures an overall process that is fully-automated and cost-effective.

YOUR BENEFITS

- Lightweight parts to meet highest specifications, approximately 50 percent lighter than steel
- Can be fully automated and is suitable for series production

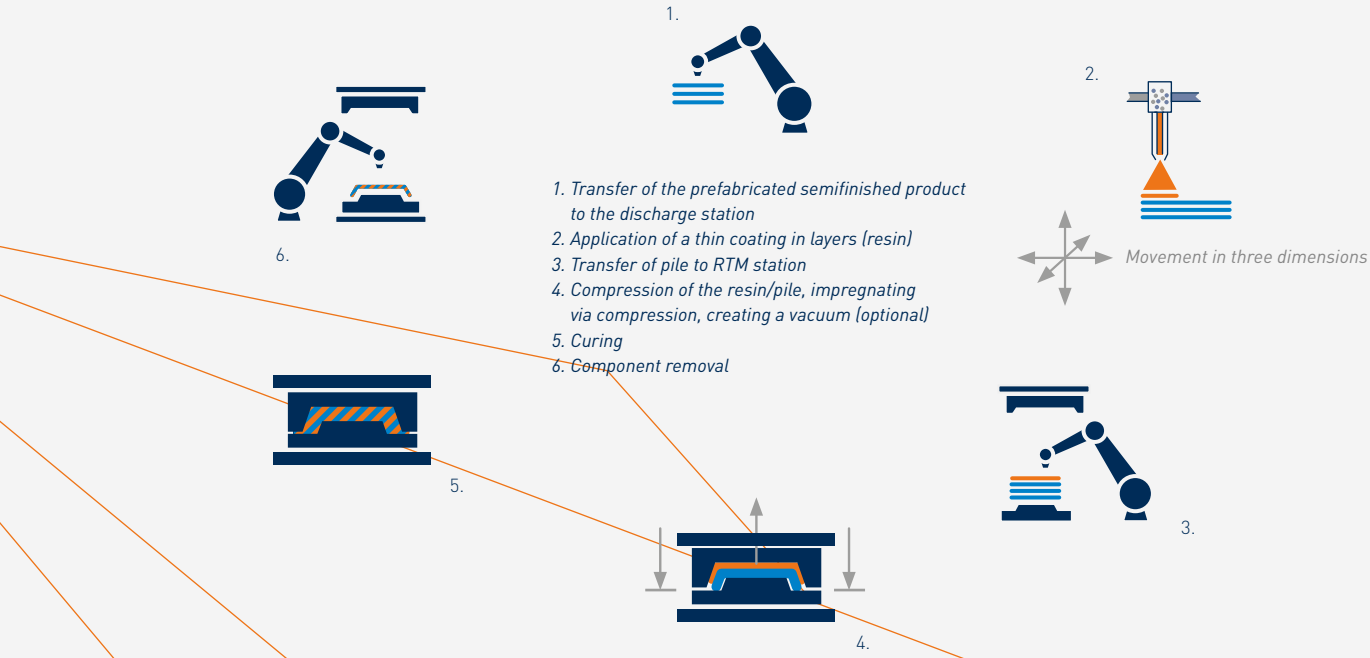

1. Transfer of the prefabricated semifinished product to the discharge station
2. Application of a thin coating in layers (resin)
3. Transfer of pile to RTM station
4. Compression of the resin/pile, impregnating via compression, creating a vacuum (optional)
5. Curing
6. Component removal

Process	Wetmolding
Description	Resin is added to an unformed fiber pile or fabric mats outside of the mold. Transport of the fiber pile into a mold where the component is preformed.
Features	1. Processability of, for example, recycled material 2. Lower compression molding tonnages are required because of the considerably lower cavity pressure
Typical applications	Manufacturing of 2D-3D components
Typical annual volumes	10,000 to 200,000 items

Examples of KraussMaffei products

Component	Transmission tunnel reinforcement
Material	Carbon fiber with epoxy resin
Technology	Wetmolding
Benefits	Manufacturing complex geometries without a preform process

Component	Upper floor panel
Material	Carbon fiber with epoxy matrix
Technology	Wetmolding
Benefits	Manufacturing complex geometries without a preform process

Generate foam structures in **lightweight injection molding**

MuCell™: Blowing agent reduces weight and improves precision molding. MuCell™ is a physical process for foaming thermoplastics. It uses nitrogen or carbon dioxide as blowing agents. For this purpose, the gas is transformed into a supercritical fluid (SCF), fed into the plastic melt towards the front of the barrel, and mixed with the melt.

During the injection process, the SCF expands and produces a component with a microcellular foam structure (<100 µm) in the core and a solid outer layer.

Even with low amounts of blowing agent, the MuCell™ process offers clear benefits:
- Weight reduction from lower density
- Higher dimensional stability and fewer sunk spots as the blowing agent expands
- Shorter cycle times thanks to a higher injection speed and elimination of the holding pressure time
- Lower clamping forces due to reduced material viscosity and elimination of the holding pressure

Using MuCell™ in conjunction with a foam stroke can result in very high degrees of foaming with a high bending stiffness and uniform wall thicknesses.

YOUR BENEFITS

- Reduced component weight
- Shorter cycle time
- Lower clamping forces

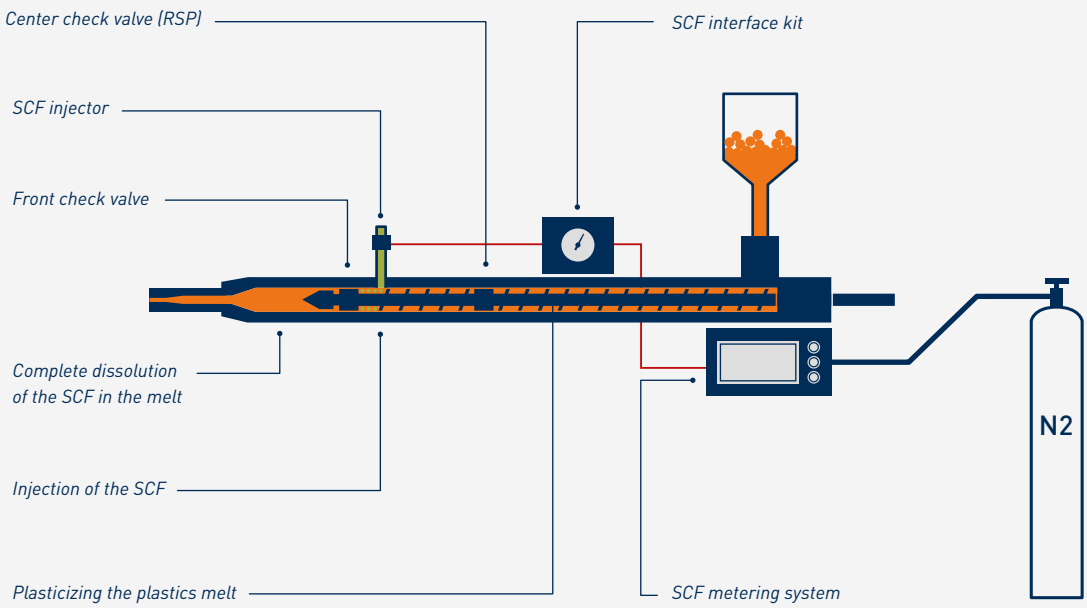

High-quality painted surfaces straight from the mold – **Painting integrated into the manufacturing process**

Colors galore in a straightforward process: In Mold Painting. In the IMP process, a paint and/or primer system (barrier coat) is sprayed into an open mold cavity either manually or by a robot. The spray system can consist of one or two components.

The IMP technique allows for flexible color management and fully meets most product specifications. The substrate material is either injected or sprayed, e.g. using LFI or FCS technology, into the mold after the paint layer. The combined system then reacts in the closed mold to give a resilient, uniform surface finish.

YOUR BENEFITS

- Process with one or two components
- Flexible color management
- Durable and uniform surface

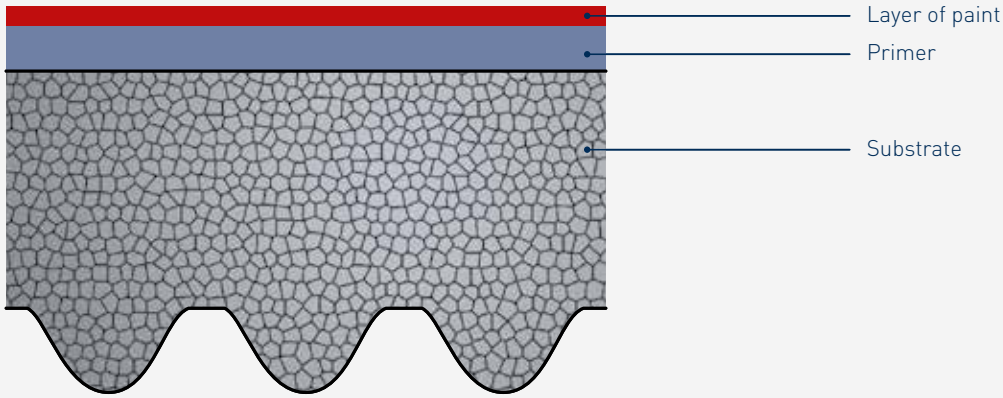

System and processing expertise **from the fiber to the finished component**

Partnerships are often launched during purely informative discussions on all sorts of occasions.

The first idea

The very first sketches and ideas define some of the parameters for the production process. Even at this early stage, our specialists are on hand to support our partners with advice and help them work out appropriate and flexible solutions. Feasibility studies also take into account possible production processes and downstream operations.

Process delivers specific component properties

As a component takes on shape and size, reliable material data is essential in order to design for different load cases. Especially for fiber composite structures with anisotropic characteristics, process trials are important for validating the production process and component properties.

Prototyping and fine-tuning

In our TechCenter we have facilities for producing prototypes and preproduction parts. This learning phase also shows up further optimization opportunities for the production process.

Solutions for series production

Once the component and the production process have been agreed, we will work with you to develop the best production solution. The degree of automation, post-mold processing, and coordination of downstream operations are all important considerations. We will then quote for a solution optimized with respect to capital investment and unit manufacturing costs.

Project and implementation phase

Our experienced project engineers are on hand to give you support, from planning and implementation to on-site production start-up, and will even assume responsibility for the project management if desired.

Production support

At the start of production (SOP) and during the start-up phase, highly-skilled experts support you with their knowledge of processes and machinery. This ensures a smooth start of production and simultaneously trains the personnel in your plant.

Service

Even after the production starts, we will continue as your reliable partner.

YOUR BENEFITS

- System solutions from a single source
- We support your project as a partner
- Individualized handling of projects and solutions

SPECIFICATIONS

Idea → *Component concept, predevelopment* → *Feasibility study* → *Detailing, design engineering* → *Validation Component and process* → *Prototyping, testing*

TechCenter for lightweight construction **and fiber composite technologies**

New ideas for components often also require new or adapted production processes. For an idea to be successful, the associated production process has to prove itself in practice.

Machine and process expertise

With its unique combination of injection molding and reaction process machinery, the KraussMaffei TechCenter makes it easy to test, optimize, or advance your processes using experimental carriers or initial prototypes under real-world conditions. A team of process developers, application engineers, and technicians is at your service in the TechCenter. Thanks to different perspectives, the close cooperation between experts in the fields of injection molding machinery and reaction process machinery produce synergies and new ideas from which you will profit.

Watch this space

Our TechCenter for injection molding and reaction process machinery covers an area of 4,000 square meters and is populated with over 25 machines and systems for various production processes.

Open and yet discreet

Mutual trust is a must when it comes to new processes and developments. To ensure the necessary confidentiality and to protect our customers' know-how we reserve separate production areas for each customer during trials and tests.

YOUR BENEFITS

- Test development processes as experimental carriers or prototypes
- Interdisciplinary fields for new ideas
- Test options for various manufacturing processes

Your visions take shape
with our PUR and compression molds

The combination of best possible process and mold technologies brings your vision of a structural component into shape.

For working with thermosets and semifinished products, KraussMaffei can supply the complete manufacturing system - the processing machinery including the mold technology - from its own resources and ensure that the principal components interact perfectly. Communicating with just one systems partner reduces inefficiencies throughout your project and eliminates the need for additional interfaces.

Tooling technology for forming and shaping

Fiber composites are often processed in the form of semifinished products. KraussMaffei's modular mold concepts can be configured to mold any specific type of semifinished product. This mold technology enables us to offer turnkey system solutions to manufacture a huge range of products – for prototypes and for series applications:

- For glass fiber-reinforced structural components
- For parts made of natural fiber composites
- For LFI processes
- Molds for a wide spectrum of foaming and casting processes

PUR mold technology – fine-tuned for each specific application

KraussMaffei molds can be adapted to a large number of different processes. This opens up new options for producing structural components. Each mold is specially engineered for a specific application and fine-tuned to production requirements:

- Temperature control matched to process requirements
- Extra wear protection where necessary, for instance, when processing abrasive materials
- Optimal ejector concept for damage-free part demolding
- Seal technology to suit the product
- Optional integrated trimming solution

YOUR BENEFITS

- Turnkey system solutions for prototypes and series applications
- Wide variety of PUR molds for various processes
- Optimum mold design for your production requirements

Heated press mold for fiber composite parts

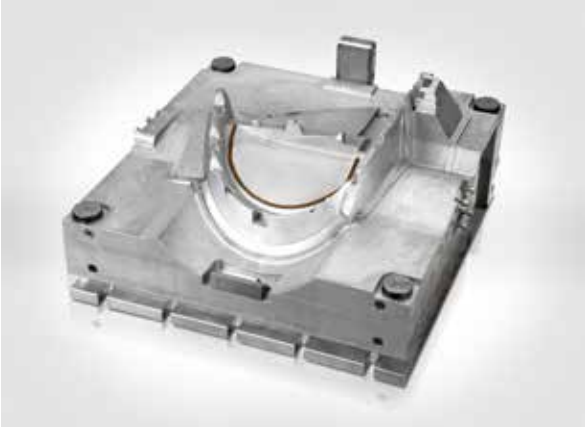

Molds for the LFI process

Powerful systems for **trimming fiber composite components**

In series production, stable and fully automated processes are very important to manufacture parts cost-effectively. KraussMaffei offers you comprehensive solutions for trimming your products.

Our solutions for trimming composite fiber components range from engineering to prototyping all the way to finished series solutions. KraussMaffei relies exclusively on the use of robot solutions for this. They enable good access to the component and efficient processing with up to three milling spindles. Product holders manufactured in-house ensure high cut precision and low variation in manufacturing tolerances.

The milling of fiber composite components, especially CFRP components, presupposes extensive experience in selecting a milling tool. This is where the entire cost-effectiveness of the process is defined. For years, KraussMaffei has been designing and delivering punching and milling solutions for the plastics processing industry and has experience from various tasks, including milling several thousand vehicle components for a renowned vehicle manufacturer.

Therefore we are capable of determining what the ideal mold is for your application. By means of conducting our routine process simulation, we determine the cycle time to be expected. It is then easy to predict the manufacturing costs.

Our robot cells are not only flexible, but also highly mobile. Conversion of the cell to manufacturing can be accomplished in a few minutes and usually requires only slight adaptations to the program or none at all.

The systems are programmed via offline systems, which enable trimming trajectories to be created quickly and efficiently as well as adaptations with precision down to 1/100 mm. Taking into consideration the task description, purely teaching these trajectories is very complex and time-consuming.

YOUR BENEFITS

- Proven technology
- Individual, process-neutral consultation
- The most cost-effective solution for every task

Robotic milling machine for helicopter seats

ONE EXPERT PARTNER OVER THE ENTIRE VALUE-ADDING CHAIN

Twin-screw extruder ZE BluePower	Reliability, flexibility, and high throughputs – these are the key requirements of a solution for compounding. KraussMaffei Berstorff offers proven twin-screw extruders which meet these expectations. The portfolio provides the appropriate solution for the compounding of plastics and other basic materials and the majority of the solutions are standard.
All-electric PX series machines for clamping forces between 250 and 3,200 kN	Flexibility, productivity, and maximum user friendliness are the design principles of the all-electric PX series. Custom-fit machines are developed for every manufacturing requirement from a large modular toolbox. A robust mechanical system, high-precision and dynamic drive technologies, as well as intelligent energy management make the PX a reliable, productive, and efficient performer in any injection molding operation.
The CX modular platform – hydraulic and hybrid – from 350 to 4,300 kN	The CX series of hydraulic injection molding machines features a 2-platen clamp design. The ultimate in modular engineering, the CX series offers over 100 clamp/injection unit combinations and over 500 options, making it possible to configure efficient, application-specific, high-performance machines. CX machines are the perfect starting point for today's technology variants – from processing thermosets to multicomponent molding to foam processes.
GX series – the new dimension of injection molding – from 4,000 to 11,000 kN	With their first-class hydromechanical twin-platen design in conjunction with the single-piston injection system, the machines of the GX series set new standards with respect to performance, usability, and value stability. Thanks to the modular design, the compact twin-platen clamping unit can be individually combined with all available injection units. The GearX locking mechanism and the GuideX guide shoe provide a new dimension to injection molding.
Large all-hydraulic, MX-series machines for clamping forces from 8,500 to 55,000 kN	MX machines are engineered to deliver sustained performance under demanding conditions. For all their size, they are compact, high-performance production systems, featuring fast responses, fast cycles, and high productivity. Versatile and modular, they offer a wide range of solutions, especially for large-format parts.
The global players of the EcoStar and RimStar series	The EcoStar and RimStar series offer optimal mixing and metering solutions for every type of PUR processing. Smart and Plus – mixing and metering machines that feature modular engineering and flexible machine configurations that cover the whole spectrum of PUR processes. The RimStar Thermo version is engineered to process epoxy resins and serve as a metering unit for RTM processes.
Metering filled multiple-component reactive systems with the Comet series	Comet is a range of piston metering machines engineered to meter PUR components with abrasive fillers, such as glass fibers or wollastonite. The machines have metering pistons instead of pumps. The abrasive fillers can be added to both the polyol and the isocyanate component.
High-pressure mixing heads for all PUR processing applications	The mixing head is the heart of a polyurethane processing system. High shot rates, good product quality, and highest productivity are a direct outcome of our many decades of experience and our commitment to continuous improvement of the whole range of KraussMaffei mixing heads. Our mixing head portfolio ranges from linear mixing heads to multicolor, transfer, and filler mixing heads.
Mold carriers – from standard to special	Based on standardized modules, KraussMaffei supplies mold carriers with optimal mold closing for almost any application. A range of drive and closing concepts deliver the optimal combination of dynamics and efficiency. In addition to a choice of standard formats, KraussMaffei is also a successful project partner for complex custom solutions.
Expertise in foam, RIM, CCM, LFI, and special molds	KraussMaffei supplies molds and tooling for all processes, including casting, foaming, and back foaming. Each mold is a custom design, application-specific, and optimized for the specific production process. The molds are available in versions made of steel, aluminum, and synthetic resin.
Complete downstream and system solutions	Our complete portfolio of PUR processing machinery includes fully- and semi-automated processing cells for trimming, punching and routing PUR moldings. Our profound, wide-ranging expertise in tooling enables us to supply complete manufacturing lines engineered for fast processing, reduced waste, and optimized swarf removal.

MACHINE OVERVIEW

Twin-screw extruder in ZE BluePower series
Material processing

All-electric PX series machines for clamping forces between 250 and 3,200 kN
Injection molding

The CX modular platform – hydraulic and hybrid – from 350 to 4,300 kN
Injection molding

GX series – the new dimension of injection molding for clamping forces between 4,000 and 11,000 kN
Injection molding

Large all-hydraulic, MX-series machines for clamping forces from 8,500 to 55,000 kN
Injection molding

The global players of the EcoStar Compact and RimStar series
Polyurethane processing – wet side

Metering filled multiple-component reactive systems with the Comet series
Polyurethane processing – wet side

High-pressure mixing heads for PUR processing applications

Mold carriers and compression molding – from standard to specially developed for different applications
PUR processing

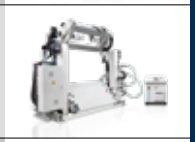

Expertise in foam, RIM, CCM, LFI, and special molds

Complete downstream and system solutions
Milling and punching systems including cutting tool

Whatever you aim to achieve in plastics or rubber processing, KraussMaffei is your partner. We are the only company to master of the three most important machine technologies, and we bring together our expertise in these fields to develop new processes and systems.

Ready for any challenge
KraussMaffei's Injection Molding Machinery Division engineers and supplies systems, including automation solutions, for standard applications and for almost all processing variants. Our main markets are in the automotive, packaging, electrical, electronics, medical technology, and consumer goods industries.

In Reaction Process Machinery, we engineer and supply machines and systems for processing polyurethanes and other reactive materials. Tooling Technologies supplies a complete range of molds and tooling, cutters, and routers. Our customer base is wide, with a focus on the automotive, construction, and the white appliances industries.

In the field of Extrusion Technology we cover compounding, extrusion of pipes, profiles, films and sheets, physical foaming, and the manufacturing of technical rubber products and semifinished tire products. Products from the company's range - from single extruders to complete extrusion lines - are used in industries as diverse as chemicals, automotive, construction, furniture, packaging, and pharmaceuticals.

TechCenter for lightweight construction **and fiber composite technologies**

Lab tests are major milestones for developing new components until they are ready for series production. KraussMaffei provides in-house component testing and can apply the findings gained from this to optimize manufacturing cells and PUR molds flexibly and immediately, without losing time.

A system partnership with KraussMaffei shortens your communication paths and ensures significant time savings on the way from design study to volume production.

ISO-accredited test center

Our test lab is accredited in accordance with DIN EN ISO/IEC 17025:2005 and is specifically equipped to test components and assemblies for automotive interiors and exteriors. We have the facilities and the in-house expertise to test safety-critical chassis and structural components, electronic control devices, and pyrotechnical safety restraint systems. Upon request and following intensive consultation, we also develop customized testing programs.

YOUR BENEFITS

- Customized testing programs
- No lost time, since the results flow directly into optimizing manufacturing cells and PUR molds
- Various options for testing the components

Extract from the KraussMaffei testing portfolio

Vibration & shock: Electrodynamic vibration testing equipment enables us to simulate all mechanical loads as defined by national and international standards or to OEM specifications. If required, temperature and climate profiles can be imposed on the vibration.

Climate, sunshine, heat and cold: Our test lab is equipped to simulate extreme weather and temperature conditions with precise repeatability and assess their impact on test samples.

Temperature shock: The temperature shock test provokes the mechanical stresses which can occur when components made of materials with different thermal expansion behavior are exposed to extreme temperatures, which can ultimately destroy the component.

Corrosion: The corrosive properties of salt spray atmospheres and condensate can damage materials and surfaces. Especially in the automotive segment, corrosion resistance is a significant sign of quality and safety.

OUR WORLDWIDE EXPERTISE IS YOUR ADVANTAGE **DIGITAL & SERVICE SOLUTIONS**

With your KraussMaffei machine, you have chosen a product that delivers the highest levels of productivity and reliability. In addition to our range of machinery, KraussMaffei focuses on comprehensive and future-oriented solutions, innovative business models and an innovative portfolio of digital products.

Customer service at the touch of a button

The process of digital transformation is becoming faster and easier than ever for the customer. Our Digital & Service Solutions unit makes your production chain even more flexible and efficient with future-oriented solutions. KraussMaffei thus globally provides an all-inclusive customer service package and networks machines and processes with each other. Our global support offers a sound basis for your local long-term success.

Individual challenges in mechanical engineering call for intelligent solutions

With our services portfolio, we support you throughout your machine's lifecycle with a strong focus on your specific needs. In order to satisfy your wishes, we offer you a wide range of solutions in order to ensure maximum availability and optimum productivity of your machines.

Technology³ as a unique selling proposition

KraussMaffei is the only supplier in the world with a product range comprising the most important machine technologies for plastic and rubber processing: injection molding machinery, automation, reaction process machinery and extrusion technology. KraussMaffei is represented worldwide with more than 30 subsidiaries and over 10 production plants as well as about 570 commercial and service partners. Working together with our customers and partners, we are thus in a position to offer vast and unique expertise in the industry.

You can find further information at:
www.kraussmaffei.com

KRAUSSMAFFEI – PIONEERING PLASTICS

Extensive expertise from a single supplier
KraussMaffei is one of the world's leading manufacturers of machinery and systems for producing and processing plastics and rubber. Our brand has been synonymous with cutting-edge technology for over 180 years. Our product range includes all technologies in injection molding, extrusion and reaction process machinery. KraussMaffei has a unique selling proposition in the industry as a result. By drawing on our proven innovative capacity, we can guarantee our customers sustained additional value over their entire value-adding chain through our standardized and individual product, process, digital and service solutions. The range of our products and services allows us to serve customers in many sectors including the automotive, packaging, medical and construction industries. We also supply manufacturers of electrical and electronic products and household appliances.

At your service all over the world
KraussMaffei is represented all over the world. Subsidiaries provide you with support in the countries shown in light blue. Our sales and service partners take care of you in the regions shown in white.

You can find all contact information at www.kraussmaffei.com

0.0 WE . 4th edition 10/19. KM 00001 BR 09/2013 EN ··· KraussMaffei reserves the right to make technical changes ··· Printed in Federal Republic of Germany.

FIBER COMPOSITE SOLUTIONS FOR
ADVANCED LIGHTWEIGHT COMPONENTS

kraussmaffei.com