More than an attractive surface
Premium surfaces for greater brilliance and depth effect

Engineering Passion

Krauss Maffei

Facts and figures

Process	Decoration							Color		Surface material thickness			Geometry								Mechanical					
	Label	Foil	Textile	Metal	TPE or TPU	Polyurethane system	Lacquer	Clear	Colored	< 15 µm	0.2-1 mm	0.8-2 mm	2 D	2.5 D	3 D	Wall thickness variation	High part complexity	Perforations	Large parts (max. L/D ratio)	Soft touch	Visual appearance (gloss)	Depth effect	Light-fastness	Scratch resistance	Chemical resistance	Finished part (no post-trimming)
CCM Clear Coat Molding	○	○	○	○	○	●	●	●	●	○	●	●	○	○	●	○	●	○	●	○	●	●	●	●	●	○
ColorForm	○	○	○	○	○	●	●	●	●	○	●	○	●	○	●	●	●	●	●	○	●	●	●	●	●	●
SkinForm	○	○	○	○	○	●	○	○	●	○	●	●	○	○	●	●	●	●	●	●	●	○	●	●	●	●
DMH Dynamic Mold Heating	○	○	○	○	○	○	○	●	●	○	●	○	●	●	●	○	○	●	○	○	●	○	●	○	○	●
Functional optics	○	○	○	○	○	○	○	●	○	○	○	○	●	●	○	●	○	○	○	○	○	○	○	○	○	●
DecoForm	○	○	●	○	○	○	○	○	○	○	●	●	●	●	●	○	○	○	○	●	○	○	○	●	●	○
Multinject	○	○	○	○	●	○	○	●	●	○	○	●	○	○	●	○	●	●	○	○	●	●	●	○	○	●
IML and IMD Inmold Labeling and Inmold Decoration	●	●	○	○	○	○	○	○	○	○	●	○	●	●	●	○	○	●	○	○	●	○	●	○	●	●

More than an attractive surface
Premium surfaces for greater brilliance and depth effect

Consumer articles, household goods, major appliances, automotive, electrical and electronic applications – application areas for technical parts are nearly endless. Surface technology perfects surface aesthetics, haptics (feel), decoration and functional integration – plastics fully reveal their special properties and benefits compared to other materials in these applications.

KraussMaffei gives you access to the right machine technology and the appropriate manufacturing process for your surface application based on their many years of experience and a large portfolio of plastics technology.

Your advantages at a glance:

- Uncompromising, high-quality production up to cleanroom standards
- Selection from comprehensive machine and intelligent process technology
- Improvement of product quality
- Increasing the efficiency of your manufacturing

Function, design, look and feel
We surround you with premium surfaces


Cosmetics containers
Smartphones and tablets

For the finest look and feel
Fine wood coating with Clear Coat Molding (CCM)

Fine wood trim is an important element for underscoring the premium-quality look of a vehicle's interior. Using the CCM (Clear Coat Molding) process developed by KraussMaffei, you can enhance such components with a scratch-resistant coating in a single work step.

The automated process coats the wood very thinly with a clear two-component PUR system. KraussMaffei's patented cavity pressure regulation compensates for the volume fluctuations caused by the natural structure of the material. As a result, the cavity is always optimally filled.

CCM for high quality

CCM machines guarantee optimal temperature control for extremely sensitive raw materials in the process. Even very small output rates are mixed perfectly and poured without bubbles into the mold cavity. As this happens, the filling process is regulated by the cavity pressure. This enables minimal changes in volume caused by natural expansion or shrinkage of the wood to be regulated. The cavity is thus filled optimally and consistently high quality is ensured.

To date, applications such as these had to be manually painted in a time-consuming process. Now with this innovation from KraussMaffei, production is automated. This means that fewer process steps are required for manufacturing components and personnel costs are reduced. In addition, the CCM process increases the quality of the components. KraussMaffei's longtime experience with moldmaking and mold carrier technology also ensure that you get high component quality, not only visually but in all other respects.

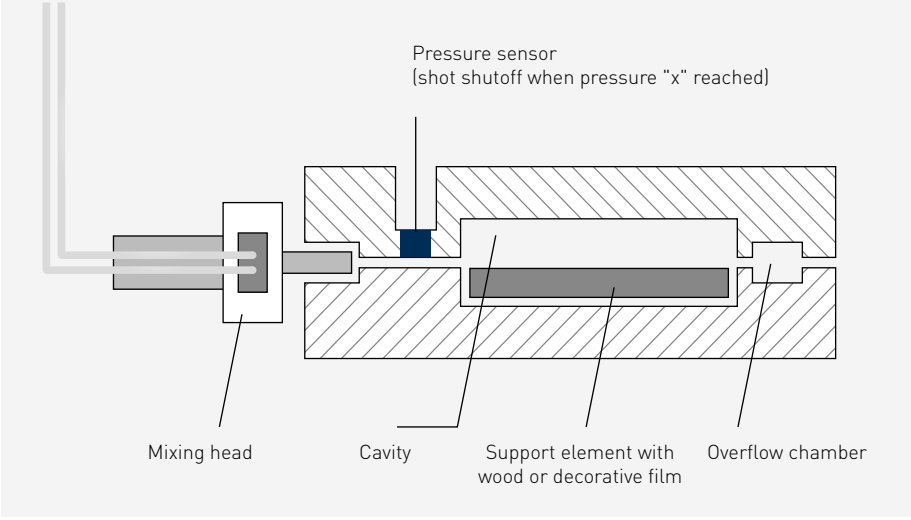

Your advantages:
- Premium-quality coatings in a short amount of time
- Meets high requirements for the optical quality of components
- Optimal temperature control for very sensitive raw materials

Component	Instrument panel trim strip Mercedes S class
Material	Real root wood veneer on injection molding carriers, with flow-coated polyurethane transparent material
Technology	CCM Clear Coat Molding
Advantages	– Automated manufacturing, even of complex components – Solvent-free and lower VOC values than you are used to in conventional painting processes – Scratch-resistant transparent layer over the wood – No yellowing, stays clear

Process	CCM – Clear Coat Molding
Description	**Part insertion – Mold closing – Pouring process** The parts to be coated are inserted into the mold. A gap with the thickness of the paint layer remains free in the cavity. This is filled with polyurethane in the high-pressure process. This way you can produce high-quality coatings in a short time.
Features	1. Eliminates labor-intensive varnishing process 2. Uniform coating layer thickness 3. Reduction of emissions
Typical applications	Trim parts on the vehicle, consumer durables, medical technology

Innovative production concept for multi-component parts
ColorForm: Intelligent combination of injection molding and polyurethane/PUA processing

ColorForm is based on the principle of multi-component injection molding, which has been proven for many years. The notable aspect of this is that the basic carrier is flow-coated with polyurethane (PUR) or polyurea (PUA) as a surface material in the second cycle after injection molding of the thermoplastic base body. This provides an exceptionally high-quality, scratch-resistant surface.

The automotive industry is always striving for the best quality. ColorForm fully satisfies this demand, since it is an innovative technology that makes it possible to create colored or transparent high-gloss surfaces just a few tenths of a millimeter in thickness.

Save space with RIMStar Flex

The surface material (PUR/PUA) is injected directly into the cavity using the RimStar Flex ColorForm reaction process machine - which has been specially developed for this technology - and using the mixing head. RimStar Flex systems are specifically designed for metering small volumes and can be positioned around the injection molding machine in an extremely compact way.
It now saves even more space thanks to the fully integrated RimStar X.

New effects with ColorForm

Individuality is becoming increasingly important for consumers. They want less mass production and more exclusivity. Designers need to create an increasing number of new effects to meet this demand. ColorForm gives you completely new options. For example, elements such as design lines, lettering, symbols, high gloss, directly alongside matte effects, depth effects and different structures on the surface.

With ColorForm, rejects can be reduced in several process steps. Firstly by eliminating conventional painting processes, secondly due to the single-stage process and thirdly due to the extremely robust surface finish. High scrap rates in the painting process are now a thing of the past. The process-reliable one-step process and its high degree of automation provide you with more OK parts that also no longer need to be cleaned separately.

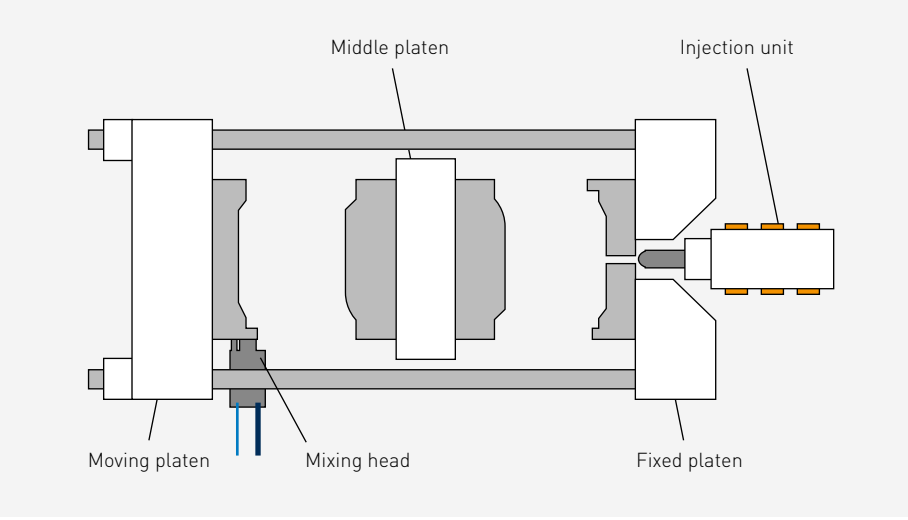

Your advantages:
- Introducing surface material directly into the cavity
- Space-saving concept
- Fully integrated and fully automated process
- Minimization of the logistics costs when manufacturing haptic components
- Reduction of scrap

Component	Light sculpture – Automotive Demonstrator
Material	ABS / PC with two-color polyurethane coat
Technology	ColorForm
Advantages	– Completely painted component directly from the injection molding machine – Solvent-free and lower VOC values than you are used to from conventional painting processes – Significant freedom in designing surface effects

Process	ColorForm
Description	**Injection – Painting – Curing** These can all be performed in a single production step with ColorForm. This can serve as a substitute for all of the usual painting steps. You get ready-refined parts with finest high-gloss surface finish straight from your production system.
Features	1. High-gloss directly from the mold without any follow-up polishing 2. Cost-effective creation of premium surfaces with new effects 3. Ability to create structured surfaces and logo depictions with high detail in the surface
Typical applications	Functional surfaces, trim strips, column paneling, mirror housings, front paneling, housing parts and cover

Premium quality, enhanced surfaces SkinForm: manufacturing thermoplastic components in a single working step

Thermoplastic components with premium quality surfaces are manufactured in one working step with the SkinForm process from KraussMaffei. These surfaces both look and feel like leather, making them highly coveted in the automotive industry. Due to the smart combination of a PUR metering system and an injection molding machine, premium-quality parts can be produced in a single manufacturing process with no need for manual post-mold processing. This saves on both time and costs.

Textured, imitation leather surfaces or surfaces with a soft-touch finish can be applied to basic thermoplastic bodies using the SkinForm process. The nature of this process is such that the polyurethane layer can either be compact or foamed and of varying thickness. As a result, even partial soft-touch areas can be completed.

Premium quality components in a one-shot process

A thermoplastic substrate is injected in a first cycle. Immediately after, in the second cycle, it is flow-coated with the PUR surface and is consequently finished. Once the reaction has finished, the mold opens again and a robot removes the finished part. In principle, all injection molding and reaction process machines can be used for the SkinForm process. The mold and the number of pieces to be reached are crucial factors in selecting a system.

Proven Multinject solutions

The SkinForm process relies on proven Multinject solutions from KraussMaffei for manufacturing composite components in many cases. Well-established multicomponent variants, such as sliding, turntable, indexing and swivel plate technology, have been adapted for the polyurethanes used in the SkinForm process. This direct and one-of-a-kind collaboration of injection molding machinery and reaction process machinery in a single company and the extensive product portfolio for each technology provide you with easy access to processes utilizing cutting-edge technologies like SkinForm.

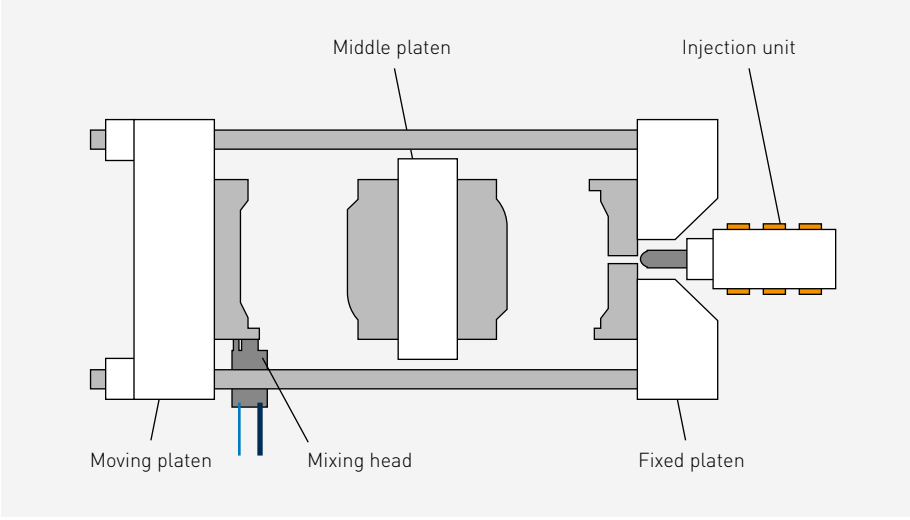

Your advantages:

- Ability to create structured surfaces and logo depictions with high detail in the surface
- Strong abrasion resistance of the surface
- Fully integrated and fully automated process
- Space-saving production design
- Minimize the logistic costs when manufacturing haptic components

Component	Demonstrator trade show – Skoda Roomster interior trim of door
Material	ABS / PC partially flow-coated with polyurethane integral foam
Technology	SkinForm
Advantages	– Premium quality surfaces directly in the injection molding process – Different haptics and degrees of softness are visible on the component

Process	SkinForm
Description	**THE ONE-SHOT PROCESS** A thermoplastic substrate is injected in a first cycle. Immediately after, in the second cycle, it is flow-coated with the PUR surface and is consequently finished. Once the reaction has finished, the mold opens again and a robot removes the finished part. In principle, all available clamping force sizes and PUR systems can be applied to the SkinForm process. The corresponding multicomponent mold concept will determine the suitable complete machine.
Features	1. Fully integrated and fully automated process 2. Perfect reproduction of the mold structure 3. A wide variety of thermoplastic substrates are possible
Typical applications	Functional surfaces, trim strips, armrests, headrests, decorative finishers, front paneling, housing parts, handles, covers

Dynamically inductive mold heat-balancing
Advanced surfaces with Dynamic Mold Heating (DMH)

DMH stands for dynamic mold heating and entails a special mold heat-balancing process where the mold wall temperature is drastically increased before injection and lowered back to the normal wall temperature after injection.

In addition to the method of using water for heating up, there are inductive and electric (ceramic) heating systems as well as steam. Heating up from the outside via IR radiation or lasers is also possible. In most cases, water is used for cooling. Another alternative is CO_2. Accordingly, these are often referred to as water/water, steam/water, electric or inductive systems. It is possible for both mold-halves to be equipped with DMH or just one of the two.

If water or steam is used for heating up, the heat-balancing channels must be contoured, i.e. just below the cavity because the heat transfer is relatively slow. Otherwise, too much cycle time would be lost because heating and cooling take place in the same channel.

Electric and inductive systems

In electric or inductive systems, only cooling takes place via the heat-balancing channels and it is usually switched on permanently. The heating element is activated during the heating phase. The transfer to the cavity is significantly faster. In electric heating systems, it must be noted that the dimension and geometrical freedom are limited. The inductive system is much more flexible, however, it requires special adaptation to the mold.

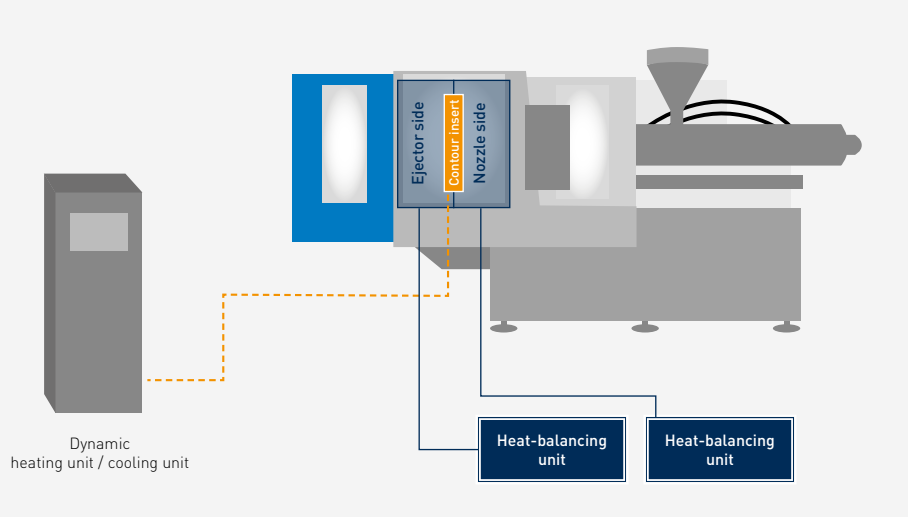

Your advantages:

- Laser and hologram appearance
- High levels of production efficiency without additional film technology
- One-shot process
- Highly precise reproduction of the microstructures which are applied to the component in the mold using laser technology

Component	Finisher
Material	PC
Technology	Dynamic Mold Heating
Advantages	The hologram is made visible as a result of the high dimensional accuracy

Process	DMH
Description	**DMH in a one-shot process** Components with premium quality surfaces are developed in the one-shot process. As a result, additional in-mold decoration steps such as preforming, punching and feeding have been omitted.
Features	1. Excellent surface quality 2. Nano structures (for example, hologram appearance, anti-reflection coating) 3. Reduction of wall thicknesses 4. Prevention of joint lines
Typical applications	Decorative panels (radio bezel, center console, trim strip), finishers and housing of premium quality household appliances, displays with nanostructures for anti-reflection, lenses with stringent requirements on the external geometry

High-quality micro and nanostructures
Our answer: functional surface aesthetics

Optical articles are of immense economical importance for plastics processing. With specifically developed compression molding processes and dynamic mold heat-balancing, the particular quality requirements on optical articles can be fulfilled.

Compared to glass, plastics provide significant advantages: in addition to low weight and low material costs, they have an increased impact strength. There is another significant advantage that comes from the injection molding process. This process offers greater levels of design freedom and is unbeatably cost-effective in large quantities.

Furthermore, premium quality optical surfaces such as anti-reflection coating can be completed in the injection molding and compression molding of micro and nanostructures. This is possible in both single-component as well as in multilayer processes.

Dynamic mold heat-balancing
The demolding and injection compression molding of structures are improved through the use of a hotter mold wall. This means that users are working with dynamic mold heat-balancing while simultaneously preventing excessive cycle time extension, or have the option of cooling back down to the demolding temperature. In doing so, the cavity is heated before or in parallel to the melt injection and subsequently cooled. This must occur as close to the contour as possible. This also minimizes the internal stress caused both by the injection compression molding and by the dynamic heat-balancing.

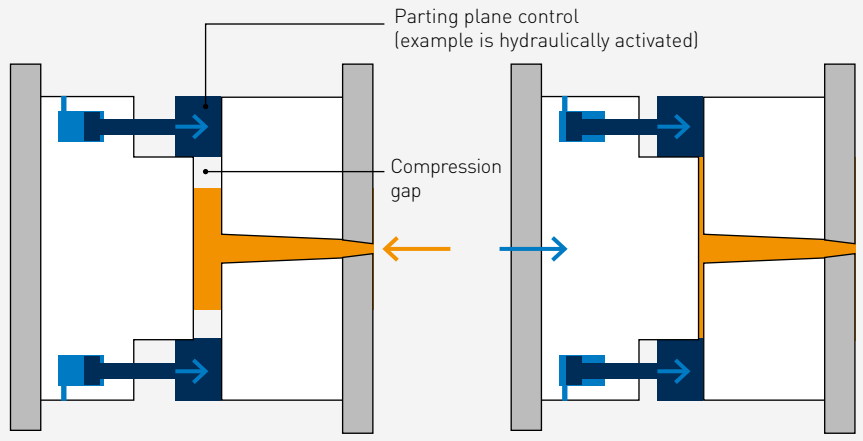

- Mold closing to compression gap
- Moving the parting plane control out
- Injection for compression gap

- Compression molding by closing the mold with active parting plane control

Your advantages:
- Surface structuring provides functionality
- Reduction of internal component stress
- Sculptured surfaces are possible
- Maximum precision with multilayer

Component	Lens
Material	PMMA
Technology	Functional surface aesthetics, multilayer
Advantages	– Improvement of optical performance (illumination and efficiency) provided by LED optics based on sculptured surfaces – Great design freedom and functional integration – Reduction of cycle time with dynamic heat-balancing concept

Process	Functional optics and optical applications
Description	**Molding process on the highest level** Unlike glass, when injection molding optical articles from plastic (e.g. lenses, eyeglass optics, prisms, washers), it is not only the geometry that is influenced by the molding process, but also the inner properties. This results in exceptionally strict requirements such as maximum shape and dimensional accuracy, low tensions and orientation and maximum transparency and purity.
Features	1. Transparency 2. Freedom from stress 3. Homogeneity 4. Innovation in lighting technology
Typical applications	Lenses, lamp covers and analysis systems

Over-molding and compression molding of delicate décor materials DecoForm is the flexible solution

KraussMaffei's DecoForm manufacturing cells are engineered for fully automated production of plastic moldings with fabric or film surfaces, including handling the delicate décor materials. With this patented process, even the most delicate décor films and fabrics can be precisely positioned in the mold and back-injected.

DecoForm® back injection

The DecoForm® back injection process is specifically suited for long, narrow components like pillar trim panels or door panels. DecoForm® back injection inserts a décor, film or material into the mold. The mold is closed and the component filled using cascade technology. After the filling or holding pressure phase, the clamping force can be released via a force release profile. This relieves the décor from the cavity pressure.

DecoForm® back molding

The DecoForm® back molding process is particularly suitable for large-format, contoured parts. Specifically for door side panels, dashboard covers, seat-back shells, trunk linings and floor mats, décor materials with outstanding pressure and temperature sensitivity are used. To keep the cavity pressure to a minimum, the clamping unit opens to a compression gap. This gap is highly dependent on the décor, thermoplastic substrate and injection points.

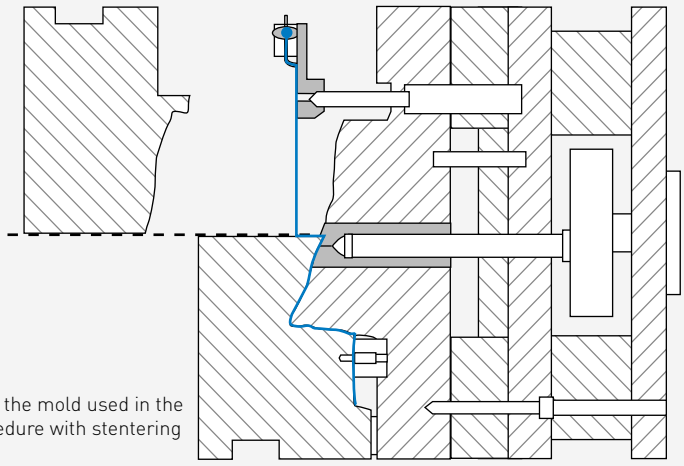

Section through the mold used in the DecoForm procedure with stentering frame

Your advantages:

- Cost-effective component manufacturing: 15-30% cost reduction compared to the conventional lamination process
- Flexible machine technology
- High process integration enables tasks to be completed in a few working steps
- High production output with compact installation area
- Environmentally friendly production processes: without use of solvents or adhesives
- Reproducible process for reliable production

Component	Door module with decorated area
Material	PP (LFG) with PP foam film
Technology	DecoForm
Advantages	– Decoration in a single pass – Cost-effective manufacturing without an additional forming process – Environmentally friendly manufacturing process without adhesive

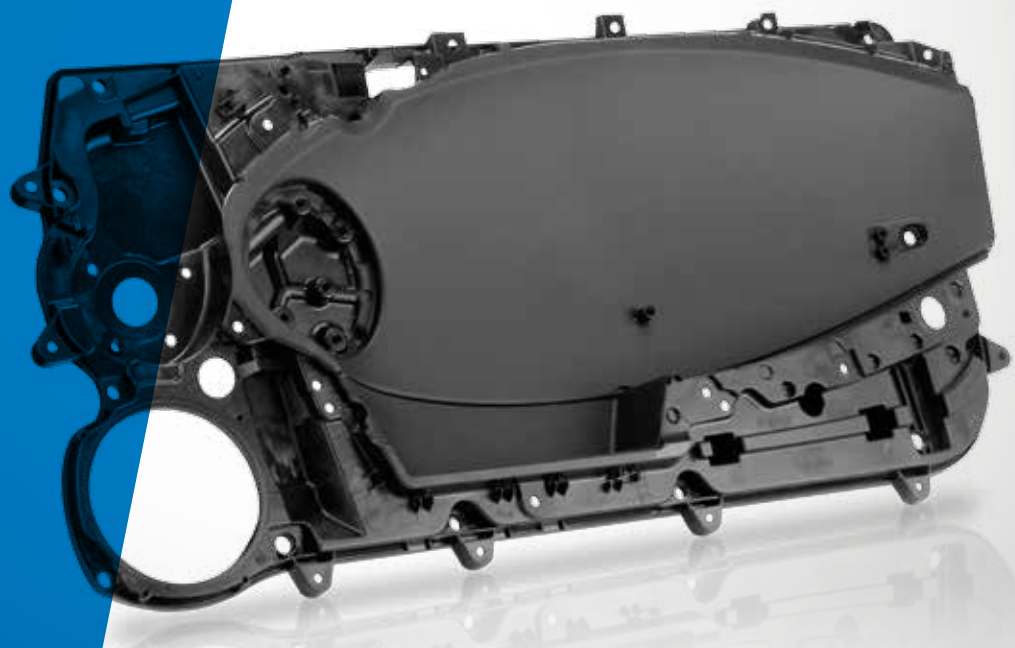

Process	DecoForm
Description	**DecoForm – connecting textiles and décor with plastic efficiently** With DecoForm®, KraussMaffei offers complete solutions for this application, including fully automated pre- and post-processing of the décor inserts in the injection molding cycle. In this patented process , even the most delicate décor films and fabrics can be precisely positioned in the mold, back-injected in a controlled process and molded into shape. DecoForm® makes it possible to customize all parameters for fastening and deformation of the décors in the process according to the raw material and part design for an optimal result. DecoForm® enables processors to produce decorated parts on injection molding machines in a way that is fast, reproducible and cost-effective.
Features	**Decorative molding** – Reproducible, one-step process – Suitable for sensitive décor (TPO/PP foam film and carpets) – Reduced logistics – Low cavity pressure: even delicate décor can be processed – High production output with compact installation area
Typical applications	Automotive, inner equipment of trains, aircraft and chairs in general

More polish with multi-components
Multinject makes plastics fancy

High-gloss surfaces look nice by themselves, but the depth effect is lacking. This can be generated by applying a clear coat to the component. Multi-component technology, which has proven its value for decades, is ideal for this purpose, whether the part is a rotary table, index plate, SpinForm or transfer molding system.

Overpacking with a transparent component, such as PC or PMMA, is common in all industries in which exposed faces are given a fancy appearance. This can include trim strips or B-pillars in the automotive sector or housings or displays in the electronics sector.

The second layer has a thickness from a mere 1/10 mm to 2 mm depending on the desired depth effect and permitted material costs. This layer also has to be scratch-resistant, while the base material underneath should be impact-resistant and not too brittle.

Multiple solutions from KraussMaffei
2-component technologies of the second design stage or higher are usually used, as three-dimensional overpacking usually takes place, but this does not work with core retraction technology. Rotary tables are suitable for one-sided overpacking. Alternatively, SpinForm technology can also be selected for correspondingly high quantities. Both take place using tried-and-tested technology from KraussMaffei with an electric hand axis and large media feedthroughs. In the latter case, hose feedthroughs are increasingly used as the solution, as they are highly robust and feature a natural thermal separation between water and oil. This makes it possible to implement high water temperatures very easily.
If it is also necessary for the outer material to flow partially around the edge, index plate technology is used in many cases. For this purpose, KraussMaffei offers highly solid electric drive systems for index plates.

If the component makes it necessary to transfer the article, KraussMaffei Automation comes into play. The multi-component technology combines all the benefits one could want in production. These include fewer manufacturing steps, and thus less scrap, with simultaneously higher quality and lower logistics effort.

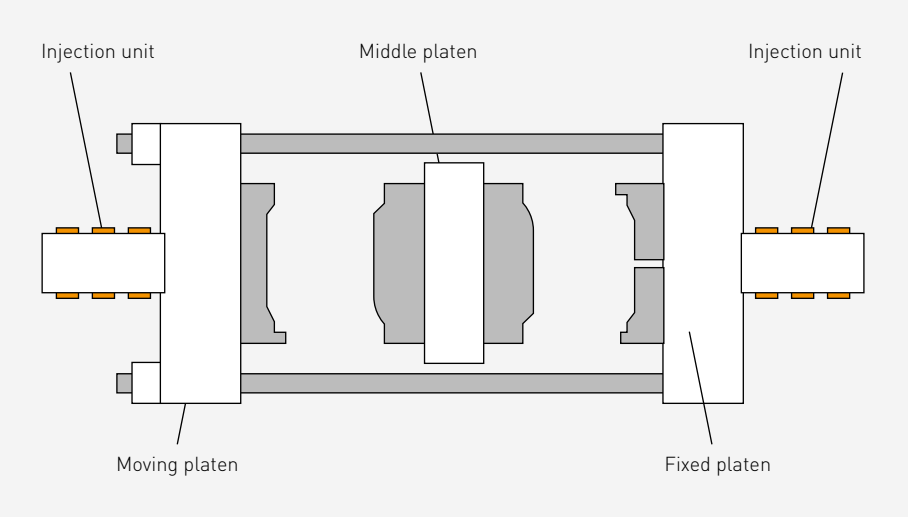

Your advantages:
- Considerable design freedom
- High product quality
- Low reject rate

Component	Front of a coffee machine
Material	ABS, PC
Technology	Multinject
Advantages	Upvalued plastic surfaces with depth effect

Process	Multinject
Description	**Multinject: Making plastics do more** For multicomponent technology, two or more plastics are connected to multi-functional components in an injection molding process. This process combines color effects and various material properties in a specific, desired way.
Features	1. Excellent integration of functions 2. Combined material properties 3. Integrated working steps
Typical applications	Consumer goods, packaging, automotive, medical/pharmaceuticals and electrical/electronics

For custom surface finishing
Inmold Labeling (IML) and Inmold Decoration (IMD)

Premium quality fronts, functionalized surfaces or—better yet—both at the same time? KraussMaffei offers the right combination of technologies.

Choose from three different options:

Inmold Labeling

1) Insertion of individual films into the mold using suitable automation.
2) Functional film back injection.
3) Mold opens.
4) Component demolding.
5) Inserting new film blanks using suitable automation.

Inmold Decoration

1) Positioning a film pass-through between the mold-halves.
2) Back injecting the décor. The decorative layer of paint detaches from the carrier film and adheres to the plastic melt.
3) Mold opens.
4) Component demolding.
5) Incremental advancement of the decorative film pass-through along the moving mold side before the next shot.

Inmold Labeling and Inmold Decoration

1) Inserting individual films on the fixed mold side using suitable automation. Simultaneously positioning an IMD film pass-through along the moving mold side. Suction by the vacuum prevents the films from shifting in the cavity.
2) Injection molding in the intermediate space between the film and décor.
3) Mold opens.
4) Component demolding.
5) Inserting new film blanks (IML) using suitable automation on the fixed mold side or incremental advancement of the decorative film pass-through (IMD) along the moving mold side before the next shot.

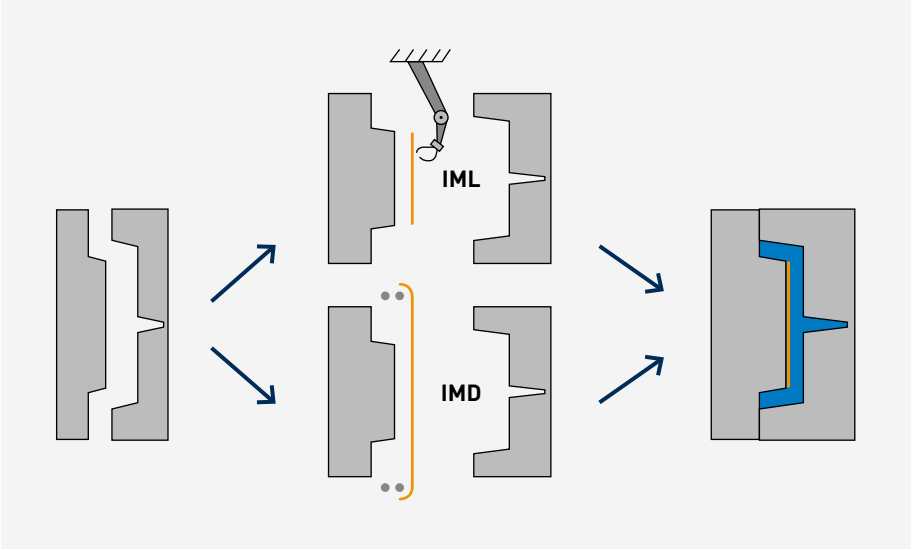

Your advantages:
- High design variability
- Process integration
- Flexible
- Decor change from shot to shot
- Complete solutions from a single source

Component	Radio / CD cover
Material	PC and PC, ABS
Technology	IML with Multinject
Advantages	– No additional imprinting, preforming or punching – More stable process

Process	Surface finishing with IML and IMD
Description	**Core features:** One-step process (paint steps / labeling films have been omitted) – Combination with cleanroom technology is possible for perfect surfaces with the continuous suction of dust during the production process – Special suitability for components with stringent requirements for surfaces and integrated functions – Smaller installation space – Preheating of 3D films for better demolding
Features	1. High degree of design freedom 2. Turnkey solutions with suitable automation 3. Combination of IML and IMD for high functionality with captivating surface aesthetics at the same time 4. Precise film insertions as a result of feeding unit 5. Transportable automation platform for high levels of flexibility 6. Plenty of space for peripherals thanks to cantilever clamping unit, especially in the CX series
Typical applications	Automotive, packaging, electronics

Further information which might also interest you

Are you looking for detailed information about the right injection molding machine and automated solution for your application?
KraussMaffei boasts an extensive range of injection molding machines. Find out about our hydraulic CX, GX and MX series or our fully electric PX series. We can offer you the right robot for every production task. You can also choose special mold clamping systems or other accessories for your injection molding machines.

Or would you like to know more about the KraussMaffei reaction process machinery product range?
KraussMaffei PUR systems can be used to manufacture fiber-reinforced structural components, as well as car seats, interior parts and shoe soles. KraussMaffei has this area covered too, with made-to-measure solutions for your production task.

Obtain information about the following, for example:
- High-pressure mixing heads
- Mixing and metering machines – outstanding product quality in PUR processing
- Versatile tools for productive automation – industrial robots in the IR/IR-S series
- Our service expertise is the key to your production efficiency

You can find our brochures and flyers with further information online at: www.kraussmaffei.com. On request, we would also be happy to send you the information and technical data for our products, free of charge.

KraussMaffei
A strong brand in a unique global group

Cross-technology system and process solutions
Whether in Injection Molding, Reaction Process Machinery or Automation – the KraussMaffei brand stands for pioneering and cross-technology system and process solutions in plastics processing worldwide. For decades, our expertise, innovative ability and passionate commitment to plastics engineering have been your competitive edge. As a cross-industry system provider, we offer you modular and standardized systems as well as solutions customized to your needs.

There for you around the world
With our worldwide sales and service network, we offer our international customers an excellent basis for a successful business relationship. Due to the close proximity to our customers, we are able to answer your individual inquiries very quickly. We work out the best possible technical and economical solution for your product and production requirements together with you. Test our machine technology for your applications and let our experts put together an individualized service package for you.

Individualized service
Our employees from customer service, application technology and service help you with your questions and needs on every topic dealing with machines, systems and processes – around the globe, quickly and with a high level of expertise. We have developed an extensive customized service spectrum with our lifecycle design, which accompanies you throughout the entire lifecycle of your machines and systems. Take advantage of the personal interaction and flexibility we offer in our practically oriented seminars. We carry out customer-specific trainings either at your location or at our sales and service locations.

You can find additional information about KraussMaffei at: www.kraussmaffei.com

KraussMaffei Group
Comprehensive expertise

Unique selling proposition Technology[3]
The KraussMaffei Group is the only provider in the world to possess the essential machine technologies for plastics and rubber processing with its KraussMaffei, KraussMaffei Berstorff and Netstal brands: Injection Molding Machinery, Automation, Reaction Process Machinery and Extrusion Technology.

The group is represented internationally with more than 30 subsidiaries and over ten production plants as well as about 570 commercial and service partners. This is what makes us your highly skilled and integrated partner. Use our comprehensive and unique expertise in the industry.

You can find additional information at: www.kraussmaffeigroup.com

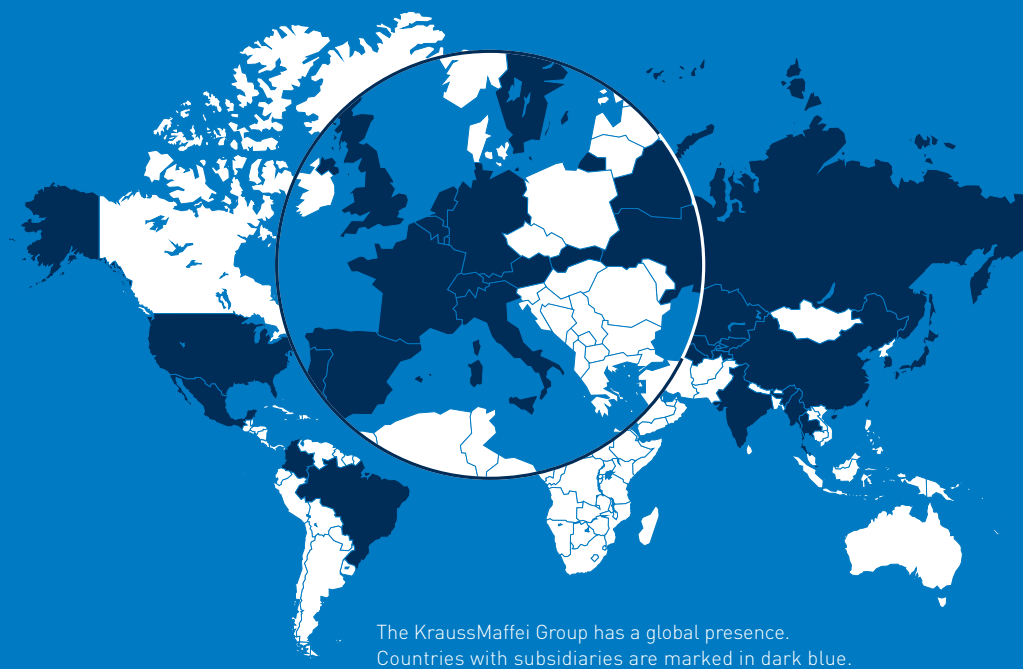

The KraussMaffei Group has a global presence. Countries with subsidiaries are marked in dark blue. In the white-colored regions, the Group is represented by over 570 sales and service partners.

More than an attractive surface
Premium surfaces for greater brilliance and depth effect

Consumer articles, household goods, major appliances, automotive, electrical and electronic applications – application areas for technical parts are nearly endless. Surface technology perfects surface aesthetics, haptics (feel), decoration and functional integration – plastics fully reveal their special properties and benefits compared to other materials in these applications.

KraussMaffei gives you access to the right machine technology and the appropriate manufacturing process for your surface application based on their many years of experience and a large portfolio of plastics technology. For uncompromising, high-quality production up to cleanroom standards. KraussMaffei does not just supply machines – we provide smart process engineering that helps you improve product quality and increase production efficiency.

www.kraussmaffei.com

1.0 WE · 1st edition 10/16. IMM 000 BR 10/2016 EN ... Subject to technical changes ... Printed in the Federal Republic of Germany